WJEC
CBAC

For teaching from 2009
For awards from 2011

DESIGN & TECHNOLOGY – PRODUCT DESIGN

SPECIMEN ASSESSMENT MATERIALS

Contents

	Page
Question Paper	**5**
Mark Schemes	**27**
Product Designers	**36**
Controlled Assessment Briefs **CAT – Product Design**	**37**

Candidate Name	Centre Number					Candidate Number				
						0				

GCSE

DESIGN & TECHNOLOGY – PRODUCT DESIGN – UNIT 1

SPECIMEN PAPER SUMMER 2011

(2 hours)

INSTRUCTIONS TO CANDIDATES

Write your name, centre number and candidate number in the spaces at the top of this page.

Answer **all** questions**.**

Write your answers in the spaces provided in this booklet.

INFORMATION FOR CANDIDATES

The number of marks is given in brackets at the end of each question or part-question.

You are reminded that assessment will take into account the quality of written communication used in your answers that involve extended writing (question 3).

Section A. 20% Marked out of 60 60 minutes

Question 1. This question is about Product Analysis. It is worth 15 marks.

The photographs show the evolution in mobile phone technology in the last decade.

The questions that follow are about mobile communication.

1997

2007

- 1997 mobile phone has an external aerial.
- 1997 mobile phone has a mono colour screen.
- 2007 mobile phone has a built in camera and GPS.
- 2007 mobile phone has internet facilities.

(a) Before starting to design the new mobile phone a Design Specification was written.

State with as much detail as you can, what you think was the most important Design Specification point for each of the following aspects.

(i) The function or purpose of the mobile phone. [2]

……

……

……

(ii) The target market for the new mobile phone. [2]

……

……

……

(iii) The safety considerations for the user of the new mobile phone. [2]

……

……

……

(b) The 2007 mobile phone case was made from Acrylonitrile Butadiene Styrene (ABS).

State **two** properties of Acrylonitrile Butadiene Styrene (ABS) outer casing that make it the most suitable material for the casing.

Property 1 : …… [1]

Property 2 : …… [1]

(c) The 2007 mobile phone was made using batch production.
Explain why this is the most suitable scale of production. [2]

……

……

……

(d) The 2007 mobile phone has to appeal to potential customers.

(i) Describe the appeal of the product in terms of **one** of the following: [2]

fashions **trends** **styles**

Circle your chosen criteria above and write your description below.

.....

.....

.....

.....

.....

(e) The bar chart below shows the sales of the mobile phone.

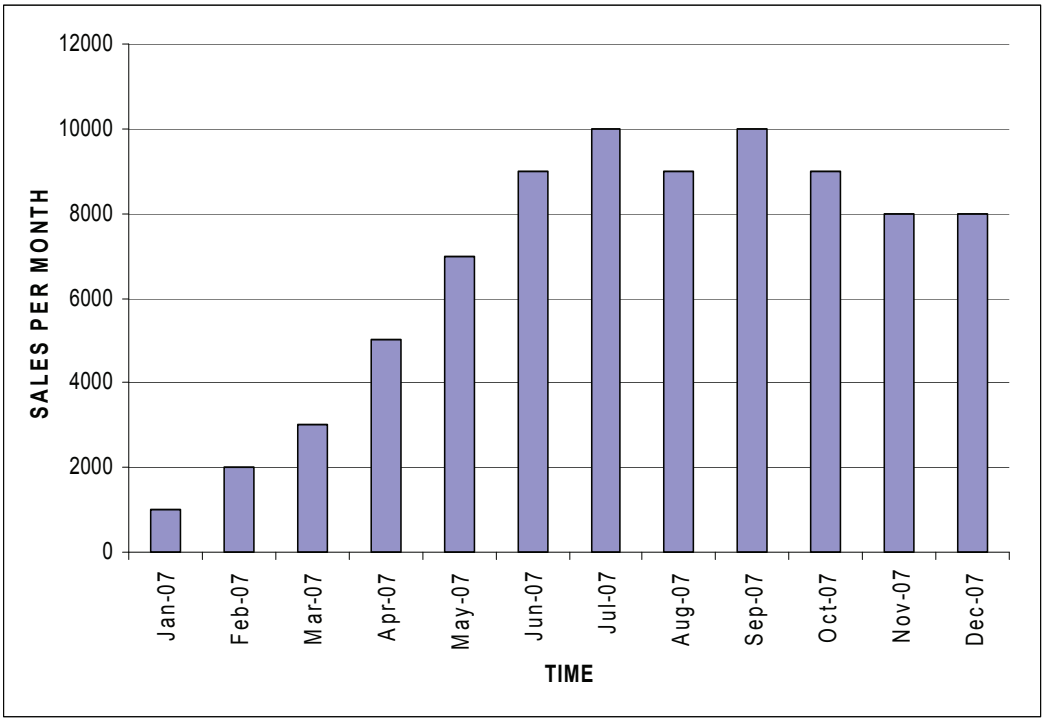

(i) State in which month exactly 7000 were sold.

..... [1]

(ii) The total number of sales in the first three months (Jan - March 07) was 6,000 (1,000 + 2,000 + 3,000) and the average sales per month in this period was 2,000.

Calculate the total number of sales in this next four months (April – July 07) and the average sales per month in this period. Show your calculations. [2]

.....

.....

.....

.....

Question 2. This question is about the general issues of D&T. It is worth 10 marks.

(a) (i) Name a product that makes use of recycling. [1]

……

(ii) Describe how the product you named above makes use of recycling. [2]

……

……

……

(iii) State **one** advantage of using recycling in a product design. [1]

……

(b) (i) Designers of new products think about the SIX Rs.

Underline the correct SIX Rs in the list that follows. Two have been done for you. [1]

REMAKE	**<u>RETHINK</u>**	**REUSE**	**<u>RECYCLE</u>**
REDESIGN	**REPAIR**	**REDUCE**	**REFUSE**

(ii) Sustainable design is more than making the product from recycled materials or making it recyclable. Describe **one** other way in which sustainable products can be designed. [2]

……

……

……

(c) Mass Production of products like the one shown below produces winners and losers.

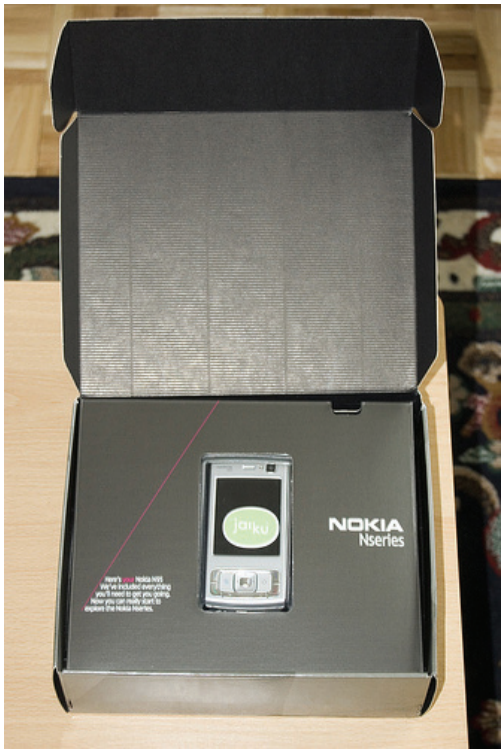

(i) State **one** of the winners of mass production of the product and give details of **one** reason for this.

The winner : …… [1]

Reason : …… [2]

……

……

……

Question 3. This question is about the designers that you have studied. It is worth 10 marks.

During your course you have studied the work of Jonathan Ive and Verner Panton.

Select one of these designers and write a short essay in the space below to :- [10]

- Describe the designer's work identifying its main features.
- Discuss the influence your chosen designer has had on other designers.

Marks will be awarded for the content of the answer and the quality of written communication.

……

……

……

……

……

……

……

……

……

……

……

……

……

……

……

……

Question 4. This question is about the Design Process and how it is used. It is worth a total of 25 marks.

PART A

(a) (i) The design process uses a number of steps in a specific order.
Select from the list below the correct activity to complete the table of the steps in the design process. [3]

GENERATE IDEAS **DEVELOP AND MODEL A SOLUTION**

RESEARCH THE TASK **GIVE DETAILS OF THE FINAL SOLUTION**

LOOK AT EXISTING PRODUCTS **APPLY A GOOD FINISH**

STEP	***ACTIVITY***
1	ANALYSIS OF THE TASK
2	WRITE A DESIGN SPECIFICATION
3	
4	
5	
6	PLAN THE MAKING
7	MAKE THE PRODUCT
8	EVALUATE THE PRODUCT

(b) (i) State **one** design specification feature of a typical Product Design item. [1]

Aspect : …….

(ii) A Plan for Making is more than a list of the making process. State **one** other consideration included in a plan and describe why it is important.

Consideration: …… [1]

Importance : …… [2]

……

……

PART B

(a) Salt and Pepper shakers have traditionally looked like the wooden set shown below left. Product designers working for Alessi have transformed the traditional product into a fun yet functional form of shaker called Lilliput's fleas shown below right.

Traditional Salt and Pepper shakers

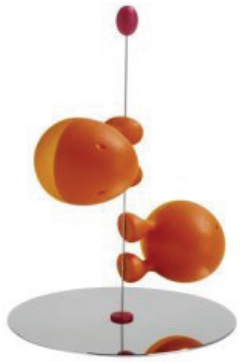

Alessi designed Lilliput's fleas

You have been asked to re-design the lever arm corkscrew shown alongside to reflect a more up dated design.

Draw **one** idea for the sweet box. Use notes to explain your idea.

Marks will be awarded for:

(i)	Generate one idea so satisfy a specification.	**8**
	• reflect a theme of your choice;	*1*
	• use a rack and pinion mechanism as a starting point;	3
	• include a suitable form for the handle;	2
	• have a suitable shape for the body and style of lever arms.	2
(ii)	Specify suitable materials.	**3**
(iii)	Showing the sizes of the net to make the box.	**3**
(iv)	Quality of communication.	**4**

Place your answer in the box drawn on this page.

SECTION B 20% Marked out of 60. 60 minutes

Question 5. This question is about Commercial Manufacturing Practical. It is worth a total of 10 marks.

A local youth club is having an industry week. You have been asked by the head teacher to manufacture 50 of the **heart shapes below**. All the **hearts** must be the same. These are to be given away to visitors.

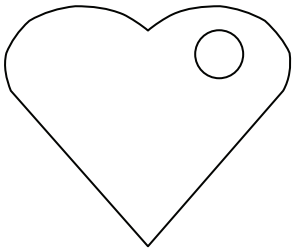

(a) Choose a specific material you are familiar with and explain why it is suitable for this scale of production.

(i) Material : .....

……

Reason : ..... [1]

(ii) Use notes and sketches to show how you would accurately manufacture the correct number of shapes needed. [3]

(b) (i) Quality control is a vital part of the manufacturing process.
Briefly describe what is meant by quality control.

.....

..... [2]

(ii) Name **one** example of how you could use quality control when manufacturing your shapes.

..... [1]

(c) There are many regulatory bodies, which look after consumer interests.

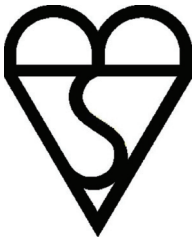

(i) What is the name of this symbol? ……. [1]

(ii) When the following symbol is shown on a product, explain how it offers protection to the customer.

.....

..... [2]

Question 6. This question is about Materials and Components. It is worth a total of 15 marks.

(a) Materials can be classified into groups. Many fit into more than one group.

(i) Name a material, which is renewable.

……..……. [1]

(ii) Name a material, which is non-renewable.

……..... [1]

(iii) Name a material, which is biodegradable.

..... [1]

(iv) Give **one** advantage of using biodegradable materials for packaging.

..... [1]

(b) The diagram shows a replacement 3 pin plug and cable.

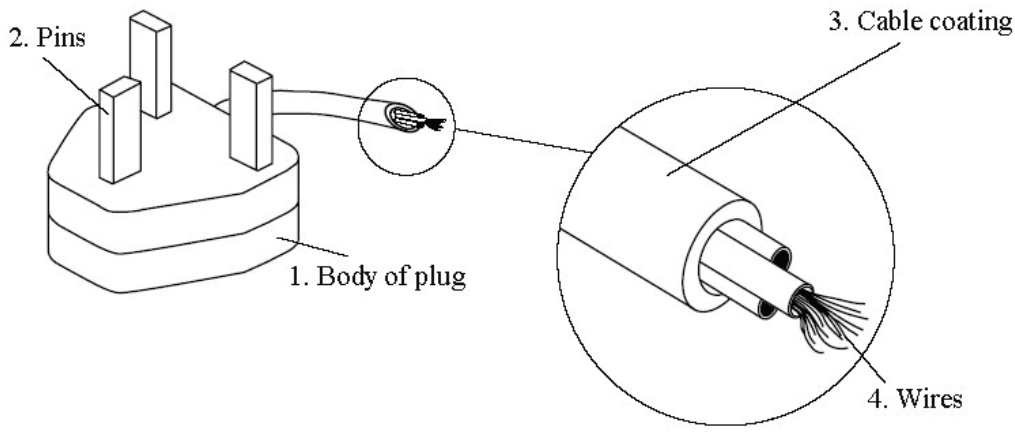

Underline the correct material *type* and **name** the specific material for **each** of the parts labeled. *Two are done already for you.* [4 x 1]

Part	***Material Type***	***Specific Material***
1. Body of plug	Metal <u>Plastic</u> Wood	Melamine Formaldehyde
2. Pins	<u>Metal</u> Plastic Wood	Brass
3. Cable Coating	Metal Plastic Wood	
4. Wires	Metal Plastic Wood	

(c) (i) The body of the plug is made from *Melamine Formaldehyde*.
State **one** property of this material and explain why it is important in this product. [2]

Property: .....

Explanation: .....

(ii) The pins of the plug are made from brass.
State **one** property of this material and explain why it is important in this product. [2]

Property: .....

Explanation: .....

(d)

Increasingly, manufacturers will use wood from managed forests.
Explain what you understand by the term managed forests. [3]

.....

.....

.....

Question 7. This question is about Tools, Equipment and Processes. It is worth a total of 20 marks.

(a) A disposable plastic sandwich container is shown below.

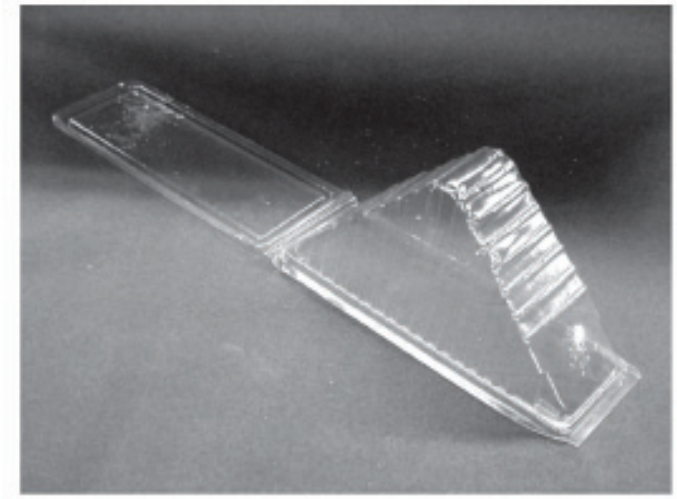

(i) From the list below, **underline** the correct process used to manufacture the sandwich container. [1]

Blow Moulding ***Vacuum Forming*** ***Press Moulding***

(ii) Name a suitable plastic material for the sandwich container.

..... [1]

(iii) Give **two** reasons why the material you named in part (ii) is suitable for the sandwich container.

Reason 1: ….....

..... [2]

Reason 2: .....

..... [2]

(b) The diagram below shows a bookcase manufactured from veneered chipboard together with details of a corner fastening.

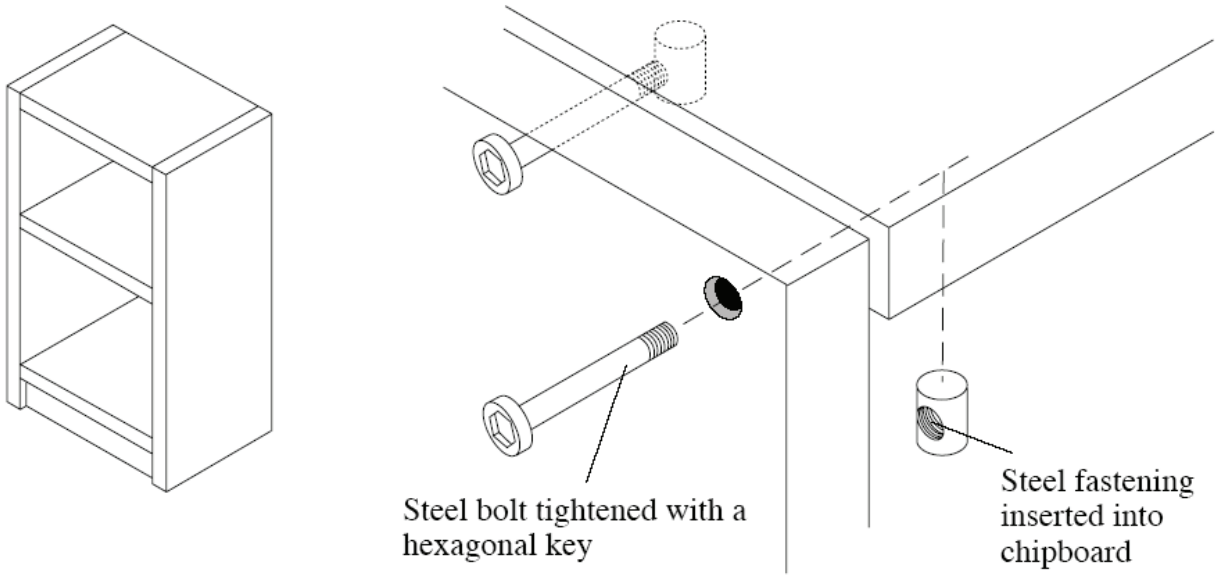

(i) Underline the correct answer below. *Knock Down Fitting* (KDF) is a: [1]

Permanent ***Temporary***

(ii) The bookcase is bought *flat packed*. Explain what you understand by this term.

……

……. [2]

(iii) Explain the advantages of using the corner fastening shown to construct the bookcase.

……..

……..

…….. [2]

(c) A product designer has been asked to restyle the handle of a garden trowel. The front part of the trowel is shown below.

From a Product Designers point of view, there are important points that should be considered when design a successful handle for the trowel.

(i) State a suitable material to make the model. [1]

……

(ii) Give **one** reason why a designer would make a block model when developing a new design. [2]

……

……

(iii) Suggest a suitable finish that you would apply to your model of the handle. [1]

……

(iv) How would the study of Anthropometrics / Human Factors assist in the design. [1]

……

(d) The photograph alongside shows a block model of a garden fork.

(i) Use the grid below to make sketches of the parts needed to make the block model for the garden fork above. [4]

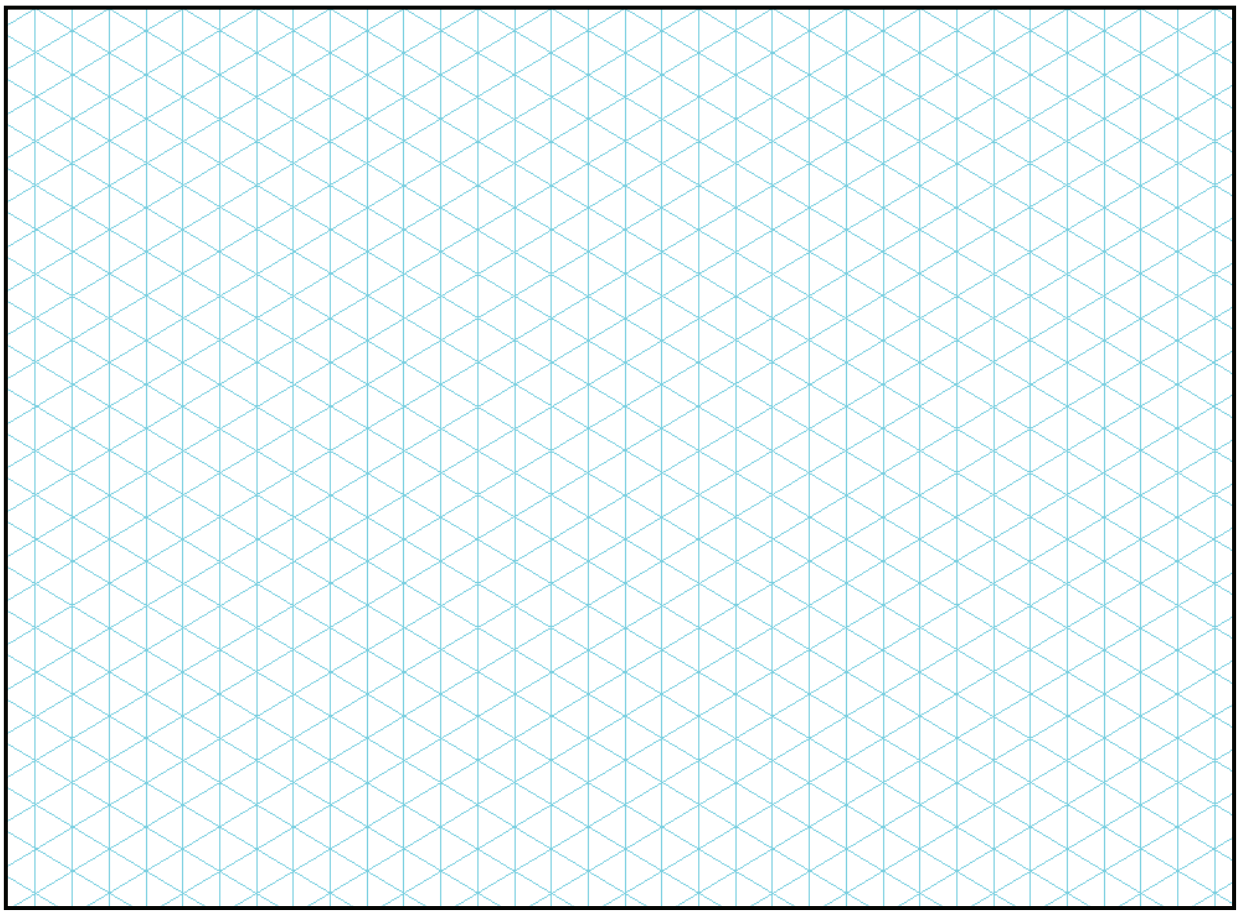

Question 8. This question is about ICT / CAD / CAM / Systems and Processes. It is worth a total of 15 marks.

(a) Computer aided design (CAD) and computer aided manufacture (CAM) are now used in the design and prototyping of products.

(i) Explain the advantages of using CAD for designing. [2]

.....

…….....

(ii) Explain the advantages of using CAM when making prototypes. [2]

.....

…….....

(b) A cosmetics company is redesigning one of it range of perfumes. An image of the company's logo needs to be included on a prototype package and a flat bed scanner, as shown, is a commonly used tool to do this job.

(i) Complete the sentences about the scanner using the correct words from the list below. [3]

Input ***Resolution*** ***Colour*** ***2D*** ***Images*** ***Scale***

It is used to copy …… into a computer.

It is usually used to copy …… objects but can be used to copy 3D objects too.

A flat bed scanner is a computer …… device.

(ii) From the list below, **underline** which type of software packages you would use to alter the image. [1]

A bitmap editing package

A vector drawing package

A video editing package.

(c) A drawing of the new perfume box is shown below.

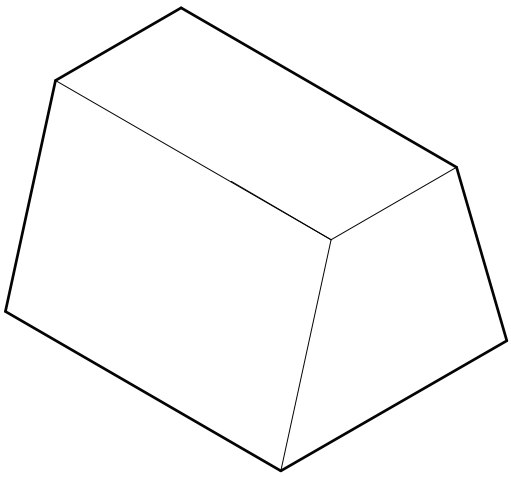

The Ortographic Drawing below has already been started.

(i) Complete the drawing of the Plan and End views. [4]

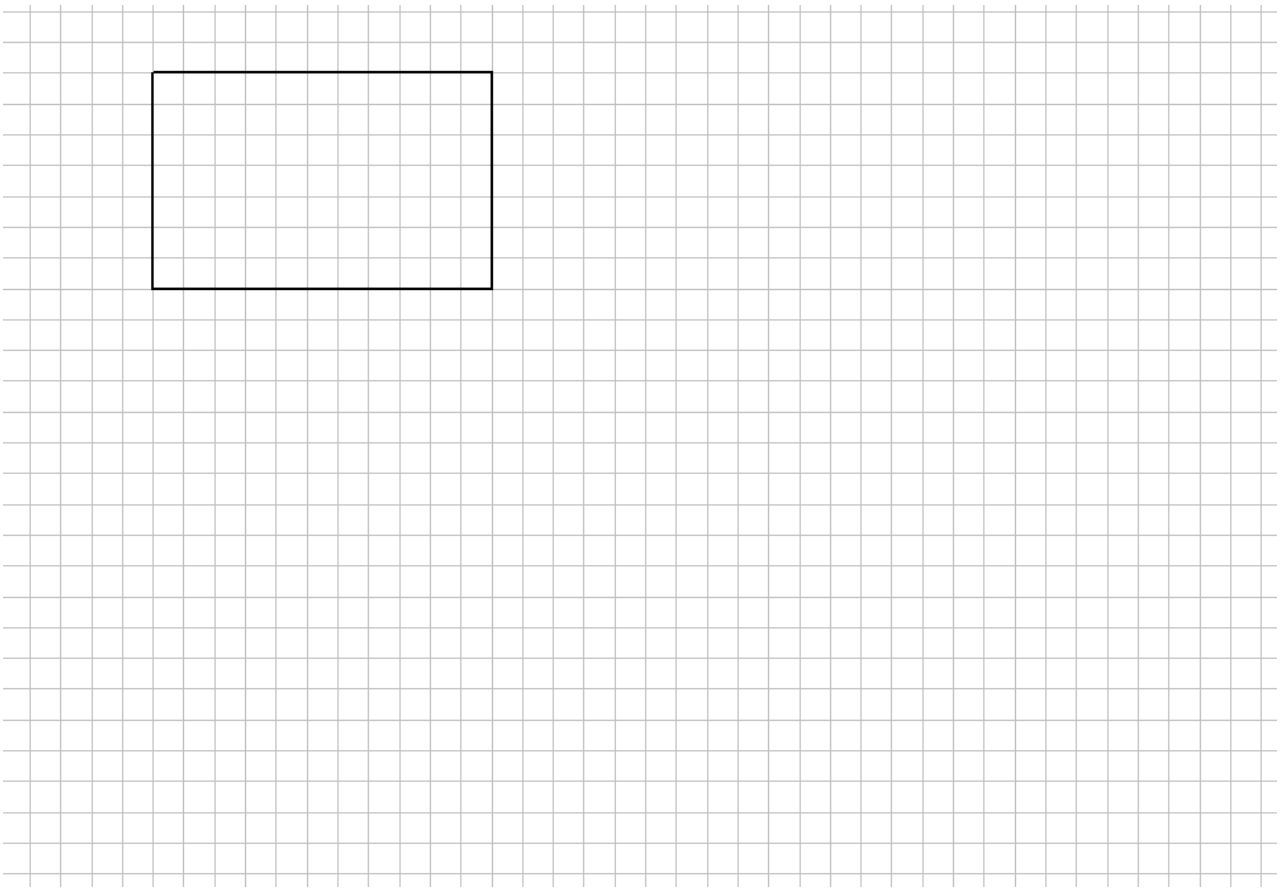

(d) When a product is launched it could follow a Product Life Cycle Curve like the one below.

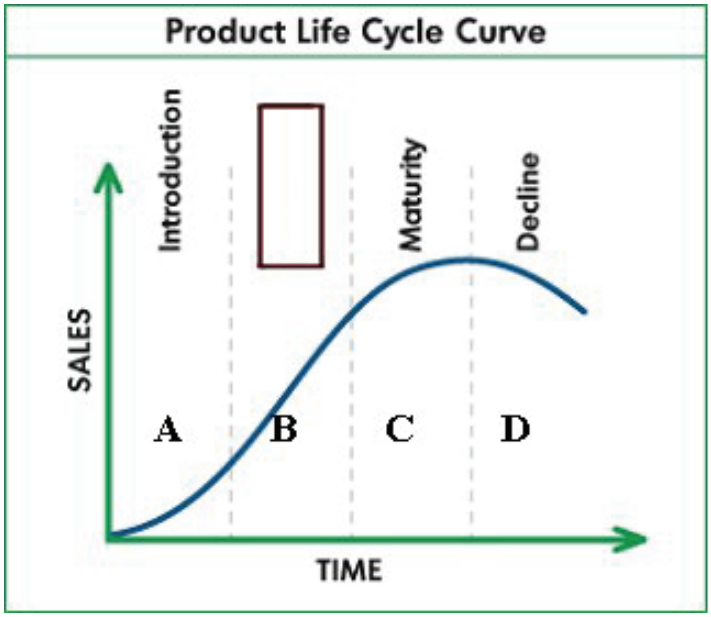

(i) Label the missing part to the cycle. [1]

(ii) Explain what happens to sales in part C.

……

…… [2]

Product Design SAM Section A MARK SCHEME

					On paper	Question Totals	Runningl TOTAL
1	a	i	No answer or the answer does not address a Function or Purpose.	0			
			Appropriate specification point made about Function or Purpose but lacking detail appropriate for a Design Specification (SPAR). E.g. To improve appearance, to use new technologies, to make it smaller.	1			
			Appropriate specification point made about Function or Purpose with detail appropriate for a Design Specification (SPAR). E.g. To make the phone more appealing to customers.	2	2		
		ii	No answer or the answer does identify a specific Target Market.	0			
			Appropriate specification point made about target market identified but lacking in detail appropriate for a Design Specification (SPAR). E.g. Business people to email, teenagers to take photos.	1			
			Appropriate specification point made about target market identified made with detail appropriate for a Design Specification (SPAR). E.g. Users can take photographs and email them for personal use or business.	2	2		
		iii	No answer or the answer does not identify a Safety Consideration.	0			
			Appropriate specification point made about Safety Considerations but lacking detail appropriate for a Design Specification (SPAR). E.g. no loose parts, no sharp edges.	1			
			Appropriate specification point made about Safety Considerations with detail appropriate for a Design Specification (SPAR). E.g. To make sure that the keyboard is protected, Surface finish and no sharp edges.	2	2		
	b		No answer or an answer that does not state any of the properties of Acrylonitrile Butadiene Styrene (ABS) will be awarded - 0 marks. Straightforward statement of the physical, mechanical or Sustainablity properties of Acrylonitrile Butadiene Styrene (ABS) is required. - 1 mark for each appropriate property. E.g. Strength, Surface Finish, Production method.	0 or 1 and 1	2		
	c		No answer or an answer that does not address the issues of scale of production will be awarded - 0 marks. A simple answer – an assertion – can be awarded 1 mark. An elaborated that explains can be awarded 2 marks. Answers need to address - the numbers to be made Or - the machines are used for many products. E.g. Phone cases are made in batch production. 1 mark. Thousands of items will be needed. 1 mark. Thousands of phones will be made on machines that are also used for making other plastic items. 2 marks.	0 or 1 or 2	2		
	d	i	No answer or an answer that does not describe how the product appeals to potential customers will be awarded – 0 marks A simple answer – an assertion – can be awarded 1 mark. An answer with some simple description can be awarded 2 marks. Answers need to address description of how the product is conforms to fashions, trends or styles and how this helps the product appeal to customers	0 or 1 or 2	2		
	e	i	No answer or an answer that is wrong will be awarded – 0 marks May 07 – 1 mark	0 or 1	1		
		ii	No answer or incorrect answer with no calculations. 1 mark for correct interpretation of graphical data. 1 mark for correct answer with calculations.	0 1 1	 2		
						15	***15***

					On paper	Question Totals	Running TOTAL
2	a	i	No answer or the answer does not name a Product.	0			
			An appropriate product is named. E.g. Package, storage device.	1	1		
		ii	No answer or the answer does not describe how a product makes use of recycling.	0			
			Appropriate description of the use made of recycling but lacking detail. E.g. can be recycled, made from recycled materials.	1			
			Appropriate description of the use made of recycling with appropriate detail. E.g. Because the storage device is made from plastic it can be recycled after it has been used. (Each pencil made using a recycled vending cup).	2	2		
		iii	No answer or the answer does not state one advantage of recycling in Product Design.	0			
			An appropriate advantage is stated. E.g. It reduces the use of wood in making new pencils.	1	1		
	b	i	No answer or the answer does not identify the correct words.	0			
			Answer selects REMAKE REUSE REPAIR REFUSE.	1	1		
		ii	No answer or the answer does not describe how a sustainable product can be designed.	0			
			Appropriate description of how a sustainable product can be designed but lacking detail. E.g. Can be reused.	1			
			Appropriate description of how a sustainable product can be designed with appropriate detail. E.g. Items can be designed in modular form so that it only certain parts need replacing.	2	2		
	c	i	No answer or the answer does not identify a winner.	0			
			A winner is identified and clearly stated. E.g. user, factory worker, shop worker, shop owner.	1	1		
		ii	No answer or the answer does not give a reason that is appropriate.	0			
			Reason given that is an appropriate one for the winner that has been identified but lacking detail. E.g. will make money.	1			
			Reason given that is an appropriate one for the winner that has been identified with good detail given. E.g. Having a product to make will provide employment for workers in the factory.	2	2		
						10	***25***

					On paper	Question Totals	Runnning TOTAL
3			No answer or no relevant issues described or discussed	0			
			Candidates would need to include references to the following in their answers. Verner Panton • Consider to be Denmark's most influential 20th.century furniture/interior designer. • Ideas always Innovative. • Futuristic designs. - Always prepared to go against the norm. • Loved to experiment with new materials. One of the god fathers of the plastic chair. • Very 60s style. • His design of furniture is still in production today. • Architecturally trained. • Started of his design thinking based on architecture, came up with the wacky idea of the collapsible house. • His chairs were revolutionary for their time because they had no legs or backs. • First designer to come up with 'single-form' injected moulded plastic chair. • During the 60s design complete environments. • Psychedelic colours often a feature of his work. • Loved bold colours and shapes. • Designed everything in the home from carpets to chairs etc. • Iconic figure in terms of his chair and lamp designs. • Originals are now auctioned, highly valued. Jonathan Eve (Born 1967) • Principal designer of the iMac, iPod. • Modern day legend but not know by the public at large. • Liked to use translucent colours. • First designer to us the internal workings of a product as a feature /selling point. • Tended to use two or three colours on his products. • Minimalistic, simple designs. • Prepared to use a range of colours not just stick to one or two. • Colours used were often linked to tropical names or names that give a sense of interest. • Moved away from translucent colours to metallic forms and shades. • Liked opaque covers to his designs, particularly for digital screens. • Liked minimalistic design rectangular simple forms. Sense of elegance. • Simplicity is the key not in his designs but also the functions of his pieces. • Slim line approach to his designs.				
			Some simple description of the work of one designer. Little, if any, understanding of its main features. Little, if any, understanding of the influence on other designers is shown. Quality of Written Communication is limited, presenting material with limited coherence, many errors of grammar, punctuation and spelling.	1 or 2			
			Some description of the work of one designer. Little understanding of its main features. A little understanding of the influence on other designers is described. Quality of Written Communication is basic, presenting occasionally appropriate material with some coherence, some errors of grammar, punctuation and spelling.	3 or 4			
			Description of the work of one designer. Some understanding of its main features. Some understanding shown of the influence on other designers. Quality of Written Communication is good, presenting mainly appropriate material in a coherent manner, few errors of grammar, punctuation and spelling.	5 or 6			

			Description of the work of one designer. Understanding shown of its main features. Discussion of the influence on other designers with some appropriate examples provided. Quality of Written Communication is very good, presenting appropriate material in a coherent and logical manner, very few errors of grammar, punctuation and spelling.	7 or 8			
			Description of the work of one designer. Clear understanding shown of its main features. Discussion of the influence on other designers with fully appropriate examples provided. Quality of Written Communication is excellent, presenting wholly appropriate material in a coherent and logical manner, hardly any errors of grammar, punctuation and spelling.	9 or 10			
						10	***35***

					On paper	Question Totals	Running TOTAL
4A	a	i	No answer or the answer does not identify the correct activities.	0			
			Selects the correct activities in the correct order. 1 mark for each activity correctly identified. 3 - GENERATE IDEAS. 4 - DEVELOP AND MODEL A SOLUTION. 5 - GIVE DETAILS OF THE FINAL SOLUTION.	1 or 2 or 3	3		
	b	i	No answer or the answer does not identify an aspect of a design specification that is appropriate for Product Design.	0			
			Aspect identified appropriate for Graphic Products. E.g. Use of Form, Use of Style, Use of Colour.	1	1		
		ii	No answer or the answer does not identify an appropriate consideration.	0			
			Consideration identified appropriate for a plan in Product Design. E.g. Quality of the product, time to be allocated.	1	1		
			No answer or the answer does not identify why it is important.	0			
			Reason given that is an appropriate one for the consideration that has been identified but lacking detail. E.g. tells you the time to be taken.	1			
			Reason given that is an appropriate one for the consideration that has been identified giving detail to clarify the importance. E.g. Shows the time to be allowed for each stage of the process to make sure the product is finished on time.	2	2		
4B	a	i	No answer or the answer is not a design that satisfies the brief.	0			
			The design shows a link to a chosen theme.	1	1		
			The design does not show any use of a rack and pinion mechanism. 0 marks. The design shows some parts, inaccurate drawing, missing parts 1 mark. The design shows a simple method of using a rack and pinion mechanism or nearly fully practical 2 mark. The design shows a effective method of using a rack and pinion mechanism that is fully practical 3 marks.	0 or 1 2 or 3	3		
			Include a suitable form for the handle; The design does not show any form for the handle. 0 marks. The design shows a simple form for the handle or not fully practical 1 mark. The design shows a effective design for the handle that is fully practical 2 marks.	0 or 1 or 2	2		
			The design does not show a suitable shape for the body or style of lever arms. 0 marks. The design shows a simple shape for the body and style of lever arms or not fully practical 1 mark. The design shows a effective shape for the body and style of lever arms that is fully practical 2 marks.	0 or 1 or 2	2		
		ii	No answer or the answer is not an appropriate material.	0			
			Material specified. 1 Mark each for Thickness, Colour, Surface finish.	1,2,3	3		
		iii	No answer or the answer does not include appropriate sizes.	0			
			Sizes specified. 1 Mark each for overall length, overall width, one other size.	1,2,3	3		
		iv	No answer or the answer cannot be understood, no annotation.	0			
			Poor quality drawing skills, hard to understand, annotation unclear.	1			
			Drawing skills are barely adequate, understandable, linework uneven, corners poor, not accurate (errors >2mm), annotation describes drawing.	2			
			Drawing skills are adequate, understandable, linework even, corners satisfactory, accurate (errors <2mm), annotation describes drawing with some comments.	3			
			Good quality drawing skills, accurate (errors <1mm), high quality annotation with good commentary.	4	4		
						25	***60***

Product Design SAM Section A MARK SCHEME

					On paper	Question Totals	Running TOTAL
5	a	i	No answer or the answer does not address a material or reason.	0			
			Material. Plywood, MDF, Aluminium, Polystyrene, card, acrylic, etc. Reason. Ease of production, cost, availability.	1	1		
		ii	No answer or the answer that is not feasible.	0			
			An accurate description of the process such as casting, injection moulding, laser-cutting, die-cutting, milling etc. is required. The process chosen must be feasible for this quantity and related to school production. Simple answer given with no reference to manufacturing aids.	1			
			Candidate shows some understanding but response is lacking in some areas.	2			
			Clear and accurate description where candidate shows a full understanding of the process and has taken account of repeatability through moulds, jigs, formers CAD/CAM etc.	3	3		
	b	i	No answer or the answer does not address quality control.	0			
			A series of checks.	1			
			Quality Control is a series of checks that are carried out on a product when it is made, to meet a specific standard.	2	2		
		ii	No answer or the answer does not address a Quality Control check or reason.	0			
			Is the shape the same size, is the ink coverage the same, is machine cutting correctly, is the material place in the jig correctly.	1	1		
	c	i	No answer.	0			
			British standard kite mark. BSI / British Standard Institute.	1	1		
		ii	No answer or the answer does not address a Quality Control.	0			
			Simple answer given to highlight safety.	1			
			The item has been checked and conforms to European Standards of Safety.	2	2		
						10	***70***

					On paper	Question Totals	Running TOTAL
6	a	i	No answer or the answer does not name a renewable material.	0			
			An appropriate material is named. E.g. Timber, paper/card.	1	1		
		ii	No answer or the answer does not name a non-renewable material.	0			
			An appropriate material is named. E.g. Metals, plastics.	1	1		
		iii	No answer or the answer does not name a biodegradable material.	0			
			An appropriate material is named. E.g. Timber, paper/card.	1			
			No answer or the answer does not state and advantage.	0			
			An appropriate advantage is named. E.g. Less pollution, reduce land fill sites, etc.	1	2		
	b	i	Plastic: PVC/silicon. Metal: Copper.	1+1 1+1	4		
	c	i	No answer or the answer does not state a property.	0			
			Good insulator. Tough / durable DO NOT CREDIT 'Strong'. Produces high quality product. Can be easily mass produced. Non-flammable.	1			
			A valid explanations of the property.	1	2		
		ii	No answer or the answer does not state a property.	0			
			Good conductor of electricity. Does not corrode. Is strong / durable.	1			
			A valid explanations of the property.	1	2		
	d	i	No answer or the answer does not relate to managed forests.	0			
			They plant new trees for the ones they cut down.	1-2			
			Forests are inspected to make sure they are following the code of the FSC.	3	3		
						15	***85***

					On paper	Question Totals	Running TOTAL
7	a	i	No answer or the answer does not name the correct process.	0			
			Vacuum Forming.	1	1		
		ii	No answer or the answer does not name the correct material.	0			
			PVC / PET.	1	1		
		iii	No answer or the answer does not name the correct material.	0			
			It can be easily vacuum formed. It is a cheap material as this must be a cheap product to produce. It is available in clear plastic so you can see the product. It is a non toxic sterile material suitable for food products. It's a Thermoplastic. *1 mark answer – cheap – non toxic – see through – strong.* *2 mark answer – cheap in order for the sandwich product to be sold at a reasonable price.*	2x2	4		
	b	i	No answer or the answer does not name the correct method.	0			
			Temporary.	1	1		
		ii	No answer or the answer does not describe flat packed.	0			
			Is brought disassembled. Product is sold disassembled and is put together by <u>customer.</u>	1 2	2		
		iii	No answer or the answer does not describe an advantage.	0			
			Because bookcase is made from chipboard, it is a lot stronger than screwing. Allows product to be accurately pre-drilled in a factory. Bookcase can be easily dismantled. Ensure accurate. Ensure tight fit of joints. Provides a very accurate construction. Much stronger than screwing into end grain of chipboard. Can be disassembled and reassembled easily. Note – does not need two separate advantages – accept relevant, detailed answers.	1+1	2		
	c	i	No answer or the answer does not state a specific material.	0			
			Jelutong, Styrofoam, clay, MDF, Balsa, cardboard.	1	1		
		ii	No answer or the answer does not state a specific reason.	0			
			To see how it looks before the real one is made.	1			
			To check the Aesthetic value put into production. To check the shape is functional for the user.	2	2		
		iii	No answer or the answer does not state a suitable finish.	0			
			Filler, Spray paint, vacuum formed.	1	1		
		iv	No answer or the answer regarding ergonomics.	0			
			Ease of use, comfortable fit.	1	1		
	d	i	No answer or the answer does not show a model.	0			
			All parts drawn for the garden fork. (Front fork, handle).	1+1			
			Parts drawn would fit together.	1			
			Quality of drawing.	1	4		
						20	***105***

					On paper	Question Totals	Running TOTAL
8	a	i	No answer or the answer does not state an advantage.	0			
			changes can be made easily, electronic storage of designs, designs can be sent quickly via E mail, designs can be rotated/changed from 2D to 3D and rendered, accuracy. An advantage relevant and well explained. An advantage relevant but not explained.	 1 2	2		
		ii	No answer or the answer does not name the correct material.	0			
			very accurate, particularly useful in producing large quantities of the same the object. Will run for extended periods of time. Reduction of labour costs etc. An advantage relevant and well explained. An advantage relevant but not explained.	 1 2	2		
	b	i	No answer or the answer does not state the correct answer.	0			
			Input device. Images. 2 Dimensional.	1 1 1	3		
		ii	No answer or the answer does not state the correct answer.	0			
			A bitmap editing package.	1	1		
	c	i	No answer or the answer does not state the correct answer.	0			
			Side elevation drawn in correctly.	1			
			Plan elevation drawn in correctly.	1			
			Elevations drawn to scale.	1			
			Quality of line work.	1	4		
	d	i	No answer or the answer does not state the correct answer.	0			
			Growth.	1	1		
		ii	No answer or the answer does not state the correct answer.	0			
			Product doesn't sell as much.	1			
			The sales of the product have matured.	2	2		
						15	***120***

WJEC GCSE DESIGN & TECHNOLOGY

PRODUCT DESIGN

Sample of information sent to centres.

This information would be sent to centres by September 1st 2009 for the examinations that take place in July 2011.

OTHER DESIGNERS / PRACTITIONERS

It is a requirement of the specification that candidates know about the work of professional designers within the world of Design and Technology.

Candidates should be taught about the work of :-

(i) **Jonathan Ive.**

(ii) **Verner Panton**.

Candidates should be taught about:

(a) the range of the work that each of the designers has produced over time;

(b) the features that identify the work of each of the designers;

(c) the innovations and/or new ideas that each of the designers has introduced over time;

(d) the influence that each of the designers has had on Product Design.

Candidates and teachers need to be aware that a question on this topic will appear on the Written Examination Paper.

The question on Other Designers / Practitioners will require an answer that is a piece of continuous writing. Marks will be awarded for knowledge of the designers.

WJEC GCSE DESIGN & TECHNOLOGY

UNIT 2: PRODUCT DESIGN: CONTROLLED ASSESSMENT

Sample of information sent to centres. This information would be sent to centres by September 1st 2010 for assessment that is completed in July 2011.

Controlled Assessment Task

It is a requirement of the specification that candidates complete **a 30 hour design, make and evaluate task**. Teachers are required to monitor and verify that the time limit is adhered to and that the contributions of individual candidates are recorded accurately and that plagiarism does not take place.

Candidates will not gain additional credit by exceeding the time limit.

The task can be **carried out in the normal classroom/workshop environment**.

Candidates are allowed **supervised access** to resources that may include information gathered outside the 30 hours of controlled assessment time.

Candidates may gather research/inspirational material prior to or during the assessment period and this can be referred to during the task but this material is not to be included in the material to be assessed**. Graphical work which has been prepared in advance by the candidate as part of an ongoing workbook or research, cannot be included as part of the material assessed for the control assessment task.**

Candidates may collaborate/confer with others in relation to the task but all **assessed material must be the candidates' work only**.

The supervising teacher can give candidates **limited guidance** during the task in order to clarify what is to be done and to ensure that safe working practices are adhered to.

All graphical and written work entered for this controlled assessment must be submitted on the pre-printed pages which are available for download from the WJEC website. Candidates are free to use ICT applications where they are appropriate.

It is the responsibility of the centre to **ensure the reliability and authenticity of all work presented** for this controlled assessment. Teachers and students will be required to sign a declaration that all work presented is the work of the candidate alone. **Failure to authenticate the work may result in grades being delayed or refused.**

Further details of the assessment process, including the assessment criteria, can be found in Section 5 of the Specification for Design and Technology.

The Controlled Assessment Task is divided into two sections.

Section A is concerned with designing the product.
Marks will be awarded for:-

Analysis of the Task	5 Marks	
Writing a Design Specification	5 Marks	
Generating Ideas	10 Marks	
Developing and Modelling a solution	25 Marks	
Communicating the Final Solution	10 Marks	
Demonstrating Creative Thinking	5 Marks	*Throughout*

Section B is concerned with planning, making and evaluating the product.
Marks will be awarded for:-

Planning the make	10 Marks
Making the Product	90 Marks
Evaluation of the Product	10 Marks
Suggesting Improvements	10 Marks

When completing the Controlled Assessment Task candidates should:-

- contextualise the chosen brief;
- design creatively by generating, developing, planning and communicating ideas;
- make products by working safely with tools, equipment, components, materials and ingredients;
- apply systems and control. CAD/CAM, digital media and new technologies appropriate to the focus area;
- analyse and evaluate processes and products.

Teachers or candidates, in consultation with their teachers, should choose one of the Briefs set out below.

Brief 1: **COSMETICS - PRODUCT DESIGN.**
A famous manufacturer is making a new perfume.
Design the bottle, packaging and promotion for this.

Brief 2: **SELF ASSEMBLY.**
Design a new flat pack design and its instructions for an item that can be used around the home. All good flat pack design comes with easy to understand instructions.

Brief 3: **ELECTRONICS/ELECTRICAL – PRODUCT DESIGN.**
Design a new stylised electronic product that reflects a chosen theme or designer. The product will need some form of branding to accompany it.

Assessment Plan (Marks and Percentages)

Controlled Assessment 30 hours (weighting 60%)
180 marks

Section A Designing
10 hours (60 marks) (Weighting 20%)

	Marks	Assessment objective
Analysis of the task	5	AO3
Design specification	5	AO2
Generation of ideas	10	AO2
Development and modelling Form/style/function (5) Materials/components (5) Construction/assembly (5) Size/quantity (5) Finish/quality (5)	25	AO2
Final solution – graphical concept	5	AO1
Final solution – Technical details	5	AO2
Creative thinking	5	AO2
Total marks	60	

Section B Planning, Making and evaluating
(20 hours) (120 marks) (Weighting 40%)

	Marks	Assessment objective
Plan the make	10	AO1(5) AO2(5)
Making Range and difficulty of processes (10) Quality of construction (25) Dimensional accuracy (15) Quality of finish/appearance (15) Function (10 marks) Independent working (15)	90	AO2
Evaluation	10	AO3
Improvements	10	AO3
Total marks	120	

External Assessment (Written Paper) 2 hours (Weighting 40%) 120 Marks

	Section A				**Section B**				**Total**
	Q1	Q2	Q3	Q4	Q5	Q6	Q7	Q8	
AO1		10	10		10	15	20	15	80
AO2				20					20
AO3	15			5					20
Total	15	10	10	25	10	20	20	10	120

Overall Assessment
300 marks

	Project (C A)		**Paper**		**Totals**	
AO1	10		80		90	30%
AO2	145		20		165	55%
AO3	25		20		45	15%
Totals	180	60%	120	40%	300	100%

WELSH JOINT EDUCATION COMMITTEE

GCSE DESIGN & TECHNOLOGY

Sample Assessment Materials

CONTROLLED ASSESSMENT TASK

SECTION A

DESIGNING WORKBOOK

NOTES

Candidates are required to complete one 30 hour design, make and evaluate task.

The task is divided into two sections. Section A is concerned with designing the product and Section B is concerned with planning, making and evaluating the product.

The task is time limited and teachers are required to monitor and verify this time limit.

Candidates will not gain additional credit by exceeding the time limit.

Section A of the task is to be completed in 10 hours supervised time.

All graphical and written work entered for this controlled assessment must be submitted on the pre-printed pages provided.

Section A must not exceed the 11 **A3** pages provided.

Candidates are free to use ICT applications where they are appropriate.

THESE PAGES ARE TO BE USED A3 SIZE

WJEC DESIGN & TECHNOLOGY CONTROLLED ASSESSMENT TASK	CENTRE NUMBER	CANDIDATE NAME	CANDIDATE NUMBER	Date Page Started	Date Page Started	Time Taken for Page	Total Time	PAGE 1

State the Initial Design Brief that you are going to solve.

Provide details of the Target Market for your product.

Provide details of the results of your analysis of a competitor product.

Provide details of the results of the research that you have carried out into the problem.

State the Final Design Brief that you have decided on.

Teacher's Justification
SAM

FINAL MARK

Write a detailed Design Specification for the product you are going to design.

Use this page to present up to four initial design ideas for the product.
Ideas are to be sketched to clearly show details of the ideas and notes added to explain your ideas.

WJEC DESIGN & TECHNOLOGY CONTROLLED ASSESSMENT TASK	CENTRE NUMBER	CANDIDATE NAME	CANDIDATE NUMBER	Date Page Started	Date Page Finished	Time Taken for Page	Total Time	PAGE 4

Use this space to draw your best idea. Make your drawing as realistic as you can.
Add notes to explain how it works and what it is made from.

Explain why you think it is the best idea.

You now need to get the views of others.

PARTNER 1

Do you agree that this is the best idea.

Explain how you think the idea can be improved

PARTNER 2

Do you agree that this is the best idea.

Explain how you think the idea can be improved

State if you agree with your partners.
Give reasons for your decision.

Now you have thought about your partners comments make an annotated sketch of the final idea that you are going to develop.

TEACHERS GUIDANCE.

Teacher's Justification SAM

FINAL MARK

Develop your chosen idea to improve its Form, Style and Function.

TEACHERS GUIDANCE.

Teacher's Justification SAM

FINAL MARK

WJEC DESIGN & TECHNOLOGY CONTROLLED ASSESSMENT TASK	CENTRE NUMBER	CANDIDATE NAME	CANDIDATE NUMBER	Date Page Started	Date Page Finished	Time Taken for Page	Total Time	PAGE 6

Develop your chosen idea to find the best use of Materials and Components.

TEACHERS GUIDANCE.

Teacher's Justification SAM		FINAL MARK

Develop your chosen idea to find the best Construction.

TEACHERS GUIDANCE.

Teacher's Justification SAM		FINAL MARK

Develop your chosen idea to work out the sizes and quantities of materials that will be needed to make the solution.

TEACHERS GUIDANCE.

Teacher's Justification SAM

FINAL MARK

Develop your chosen idea to consider the finish and quality issues to make sure you make a good product.

TEACHERS GUIDANCE.

Teacher's Justification SAM

FINAL MARK

Make a high quality presentation drawing of your final design.

Teacher's Justification SAM		FINAL MARK

Make a full presentation of the final technical details of your design.

Teacher's Justification SAM		FINAL MARK

WELSH JOINT EDUCATION COMMITTEE

GCSE DESIGN & TECHNOLOGY

Sample Assessment Materials

CONTROLLED ASSESSMENT TASK

SECTION B
PLANNING & EVALUATING WORKBOOK

NOTES

Candidates are required to complete one 30 hour design, make and evaluate task.

The task is divided into two sections. Section A is concerned with designing the product and Section B is concerned with planning, making and evaluating the product.

The task is time limited and teachers are required to monitor and verify this time limit.

Candidates will not gain additional credit by exceeding the time limit.

Section B of the task is to be completed in 20 hours supervised time.

All graphical and written work entered for this controlled assessment must be submitted on the pre-printed pages provided.

Section B must not exceed the 3 A3 pages provided.

Candidates are free to use ICT applications where they are appropriate.

THESE PAGES ARE TO BE USED A3 SIZE

THIS WORKBOOK IS TO ACCOMPANIED BY THE MANUFACTURED PRODUCT

Make a full plan of the stages and processes necessary to manufacture the product.

TEACHERS GUIDANCE.

Teacher's Justification SAM		FINAL MARK

WJEC DESIGN & TECHNOLOGY CONTROLLED ASSESSMENT TASK	CENTRE NUMBER	CANDIDATE NAME	CANDIDATE NUMBER	Date Page Started	Date Page Finished	Time Taken for Page	Total Time	PAGE 13

Make a full evaluation of the final product comparing it with the initial intention. The evaluation must be a piece of continuous writing

Teacher's Justification SAM		FINAL MARK

Now that you have evaluated your final product put forward suggestions for improving the design and also suggesting any improvement of the manufacture to ensure a better quality product.