The State of New Hampshire
DEPARTMENT OF ENVIRONMENTAL SERVICES
Winnipesaukee River Basin Program
Wastewater Treatment Plant
P.O. Box 68 Franklin, NH 03235
603-934-4032
Fax 603-934-4831

February 7, 2019

RE: Request for Quotation – HVAC Duct Cleaning

The New Hampshire Department of Environmental Services, Winnipesaukee River Basin Program (WRBP), owns and operates the regional wastewater collection and treatment facilities located in the Lakes Region. The WRBP is soliciting quotes for cleaning the HVAC ductwork that serve the occupied areas of the Administration/Operations building at the Franklin Wastewater Treatment Plant (WWTP) located at 528 River St. in Franklin, NH 03235.

The HVAC ductwork was installed during the original construction of this building in the 1970s and was partially updated in 2008. The air handling system includes various manual and automated dampers and sensors and is controlled by a computerized system. Exhibit A The Services more fully describes the scope of work and mechanical drawings are attached for reference. The selected contractor will be solely responsible for errors or omissions; therefore, it is strongly suggested each proposing firm arrange a visit prior to finalizing their quotation. This will provide contractors an opportunity to evaluate access to the work sites and to evaluate the level of effort needed to complete the work prior to submitting a quotation since all the HVAC ductwork, returns, supply vents, etc. serving/supplying all the occupied areas of this building are to be cleaned, regardless of their locations.

The RFQ and any addenda may be downloaded directly from the State's purchasing website: http://das.nh.gov/purchasing/bids_posteddte.asp?sort=PostedDate. It is the responsibility of the proposing firm to check for addenda.

PROPOSED CONTRACT

We include herein a blank copy of a standard state service contract (P-37), as well as EXHIBITS A, B and C. We suggest you review the general contract conditions shown on the P-37 Agreement. Note that the contractor will be required to provide certificates documenting the insurance specified in Item 14 of the P-37. Should your firm be selected to do the work, we will send you a "Notice of Intent to Award", along with a contract for execution, instructions for completing a "Corporate Resolution" authorizing the person who signed the P-37 to do so, and for obtaining an original, current "Certificate of Good Standing" from the NH Secretary of State's Office. When the original contract documents are returned to us, the contract will be process for approval by the NH Department of Environmental Services and the Attorney General's office. This process typically takes 4 to 6 weeks after the original contract documents are returned to us.

Be aware that any corporation, individual (sole proprietorship) or partnership doing business with the State must be registered and in good standing with the NH Secretary of State's Office in order to process a contract. If your company is not registered with that office, you will have 14 days to become registered. If the company is not registered at the end of 14 days, it will be at the WRBP's option to disregard the company's quotation.

SAFETY

The WRBP operates an active safety program. The selected contractor must comply with all WRBP safety rules, applicable state and federal worker safety laws, and regulations. A WRBP staff person will accompany the contractor during all work and the contractor will be expected to follow all safety procedures relative to these areas.

CONTACT PERSON

Inquiries regarding work as described in this request for quotation should be directed to the Operations Section at the WRBP WWTP at 603-934-4032. Site visits must also be scheduled by contacting the Operations Section.

QUOTATION SUBMISSION

Exhibits A, B, and C shall be completed and returned as the quotation response. See Exhibit A for additional requirements.

Quotes from a qualified contractor must be submitted before the specified due date and time. The WRBP reserves the right to: determine what constitutes a conforming quotation; to determine if a firm is qualified; to waive irregularities that it considers not material to the quotation; and award the contract solely as it deems to be in the best interest of the State. Also note that your company must be registered and be in good standing with the NH Secretary of State, Corporate Division, in order to perform work for the State of New Hampshire. If you are not currently registered, you may submit a quote, but realize that full registration with original verification document will be required prior to execution of the contract. Your firm must also have a current vendor code with the State of NH. If not a current vendor, instructions for on-line registration will be provided.

All quotations must be received by 2:00 pm on March 8, 2019. Quotes may be faxed to the WWTP at (603) 934-4831, emailed to Sharon.mcmillin@des.nh.gov or sent/delivered in a sealed envelope that is clearly marked "HVAC DUCT Cleaning Quote". Submitting firm is responsible for confirming receipt of their quotation at the WRBP Franklin WWTP before the due date and time. Note that the USP does not deliver directly to the WWTP.

Contractor quotation shall be sent to:

Winnipesaukee River Basin Program - Franklin WWTP
528 River St.
PO Box 68
Franklin, NH 03235

We look forward to your quoting on our work. If you have any questions, please contact us.

Sincerely,

Sharon McMillin

Sharon McMillin
Administrator, WRBP

Enclosures

cc: Ken Noyes, WWTP Chief Operator, WRBP
Art O'Connell, Operations Supervisor, WRBP
Mark Corliss, Operator II, WRBP
Stanley Brown, Program Assistant, WRBP

EXHIBIT "A"
THE SERVICES

The Contractor shall provide the Department of Environmental Services Winnipesaukee River Basin Program (WRBP) with HVAC duct cleaning for the Administration/Operations Building at the WRBP wastewater treatment plant located at 528 Rive St. Franklin, NH 03235. The selected contractor shall provide all labor, materials, services, tools, equipment, transportation, and facilities to complete the Scope of Work described herein.

SCOPE OF WORK

Cleaning will be conducted during WRBP's normal working hours of Mon-Fri 7am to 3pm. Contractor will schedule the work at least 2 weeks in advance and coordinate with the WRBP on a proposed schedule and sequence of work so that minimal disruption of required WRBP activities occurs. It is anticipated that the work will need to be performed in April or May 2019 so that the building HVAC system can be turned off during cleaning without affecting indoor air quality or temperature.

All cleaning and necessary demobilization and clean-up of each work area will be performed by the contractor so that WRBP staff can return to their duties in a timely manner.

All work shall be performed in a neat and workmanlike manner, in conformance with the best modern trade practices and by competent, experienced workers.

It shall be the sole responsibility of the contractor awarded the contract to comply with all local, state and federal rules and regulations in commission of the work.

Clean and sanitize all HVAC unit, ductwork for the occupied areas of the Administration/Operations Building, including offices, restrooms, laboratory, reception area, break room, hallways and all exhausts or intakes serving those areas regardless of their location.

Inspect the duct lining while cleaning to ensure that the lining stays secure on ductwork.

All work will be performed in accordance with NADCA Standard ACR 2013.

Containment and Engineering controls will be at Level 1 as defined by NADCA ACR 2013.

Level of finished cleanliness shall meet or exceed the "Visibly Clean" test as defined in NADCA ACR 2013. Confirmation shall be provided by the contractor in the form of CCTV or photos or other means acceptable to the WRBP.

HEPA filtered power vacuum equipment shall be used such that only clean air shall be exhausted during the entire maintenance/cleaning process. Agitation shall be done with a power rod system and/or brushes using compressed air supplied by the contractor's equipment. All work to be performed as per requirements dictated by OSHA, NADCA, ASHRAE and SMACNA Standards.

Contractor Initials _____

Date _____

EXHIBIT "A"
THE SERVICES - Continued

Contractor shall be responsible for providing all necessary and/ or ancillary equipment and tools to perform the scope of work, including but not limited to step stools, ladders, scaffolding, lifts, etc.

Contractor is solely responsible for repair of any damage they cause to ducts, dampers, sensors, or other HVAC components or accessories that occur during performance of the work. It is the contractor's responsibility to document any existing damage and provide that information to the WRBP prior to their commencing the work.

If access holes are required to complete the scope of work, the contractor shall note that in their quotation and then be responsible for their installation and repair using a sheet metal access plate screwed into place and sealed with aluminum contact tape such that there is no air loss or structural integrity lost.

All work will comply with the NADCA General Specifications for the Cleaning of Commercial Heating, Ventilating and Air Conditioning Systems.

Contractor will dispose of all debris removed from the HVAC systems in accordance with all applicable federal, state and local requirements.

WRBP RESPONSIBILITIES

Duct-mounted smoke sensors are installed in the HVAC system. WRBP staff will take them offline during the cleaning process.

WRBP staff will provide an escort to ensure contractor will have access to all applicable areas.

WRBP will have the work areas cleared and accessible to the contractor prior to their arrival on site. (ladders or step tools?)

WRBP will provide electricity free of charge to the contractor in order for them to complete the scope of work.

Information contained in the State's Request for Quotations dated 2/7/2019 is hereby included in Exhibit A by reference.

Contractor Initials _____

Date _____

EXHIBIT "B"
COST PROPOSAL AND TERMS OF PAYMENT

COST PROPOSAL

Full payment to the contractor to complete HVAC Duct Cleaning, as more fully described in EXHIBIT "A" and the Request for Quotation.

$_____
Amount in Figures

_____
Amount in Words

TERMS OF PAYMENT

Contractor to be paid within thirty (30) days of submission of invoice and satisfactory completion of work. Approval of this contract does not authorize any expenditure over the price limitation.

Remit Bill To:
NHDES-Water Division
Attn: Traci Knieriemen
29 Hazen Drive, P.O. Box 95
Concord, NH 03302-0095

I (We) agree to furnish the services specified in EXHIBIT "A" at the cost shown above.

_____ _____

Company Name Name (please print)

Contractor Initials _____
Date _____

EXHIBIT "C"
SPECIAL PROVISIONS

None.

Contractor Initials _____
Date _____

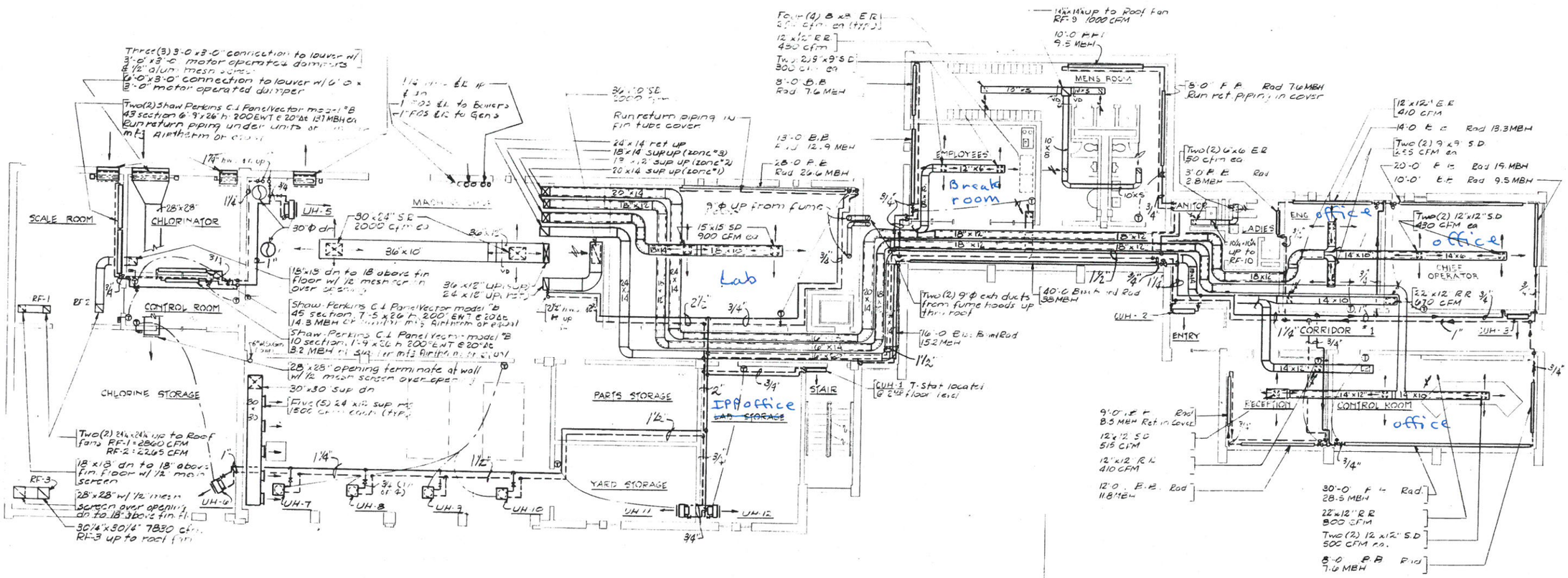

PLAN- FIRST FLOOR

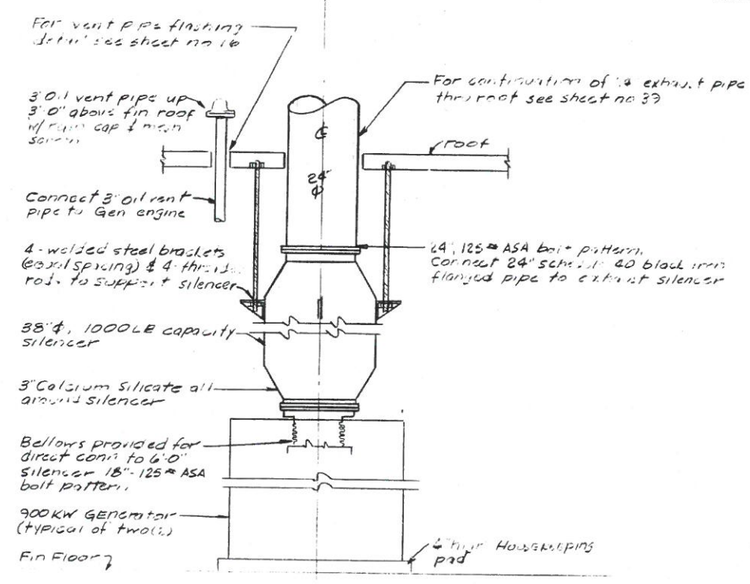

CONNECTION OF GENERATOR EXHAUST SILENCER
TYPICAL OF TWO (2) 900 KW GENERATORS

NOT TO SCALE

H-01311-1

S·E·A Consultants Inc.
Engineers / Planners
ROCHESTER, NEW HAMPSHIRE
BOSTON, MASSACHUSETTS

REVISIONS

SCALE 1/8" = 1'-0"
DATE AUG 1976
JOB NO. 213-7401
DESIGNED BY LA
DRAWN BY LA
CHECKED BY LG
SHEET 34 OF 133
APPROVED BY

NEW HAMPSHIRE WATER SUPPLY AND POLLUTION CONTROL COMMISSION
WINNIPESAUKEE WATER POLLUTION ABATEMENT PROGRAM

Franklin Wastewater Treatment Facility

OPERATIONS BUILDING - HVAC 2
PLAN - FIRST FLOOR

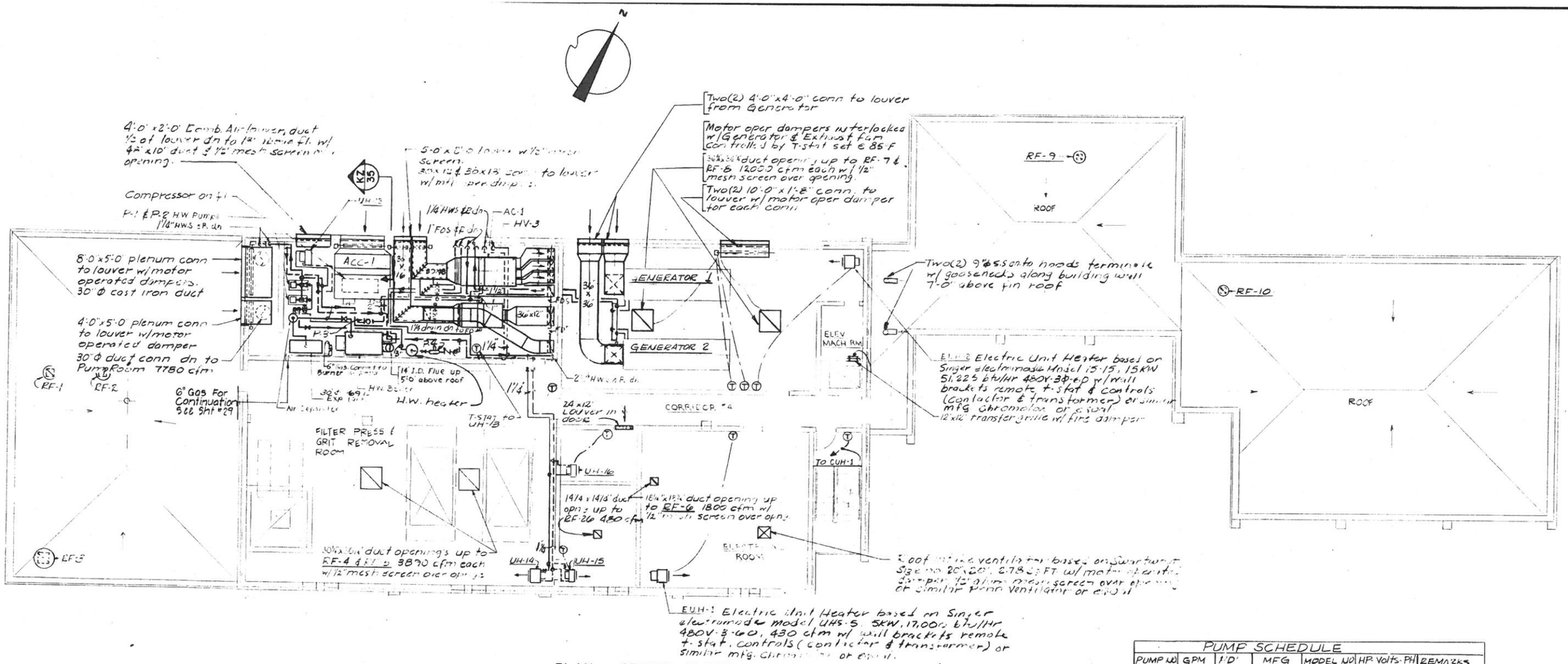

PLAN – SECOND FLOOR

PUMP SCHEDULE						
PUMP NO	GPM	H.D.	MFG	MODEL NO	HP. Volts. PH	REMARKS
P-1	100	45	THEUL	2½ 27PF-2	2-480-3Φ	HEATING SYS.
P-2	100	45		2½ 27PF-2	2-480-3Φ	" (STAND BY)
P-3	30	20		1Q-12E-1/8	1/8-120-1Φ	AC-1 & HV-3
P-4	100	6'		2C-0	1/8-120-1Φ	DOM. HW SYS.

Similar mfg. Taco or equal.

HOT WATER BOILER

Based on Weil McLain Model BL-986WF oil fired forced draft 16.05 gph 1820 MBH gross I BR input, 1582.6 MBH net I BR output 54.3 Boiler HP, 1 HP burner 208V-1Φ-60HZ w/ 4.0 controls in control panel or similar mfg. Burnham or equal

AC-1

Based on TRANE CO. multi-zone blow thru Climate changer model MP-12 5400 cfm 2150 cfm O.A (minimum) 2 1/4" total SP 5HP 480V-3Φ-60HZ Cooling Ent 80.1 db. 68.2 wb Heating Ent 37° Lvg. 80° 250MBH

Unit shall be complete w/ med capacity filter box w/ T.A filters & spring type vibration isolators. Connect each zone to 3-sets each & louver damper or similar mfg. Carrier or equal

HV-3

Based on Trane Co. horiz. drain thru Torrivent model LP-6 4000 cfm @ 1 1/2" SP, 2000 cfm bldg. w/ heating coil 69,120 btu/hr 6.9 gpm, 60° Lat, 3HP motor, 480V 3Φ-60HZ w/ throw-away filters, motor operated damper, disconnect switch, suspended at ceiling w/ suspension rods, vibration isolators and normally open 120 volt 20 amp contactors or similar mfg. Carrier or equal

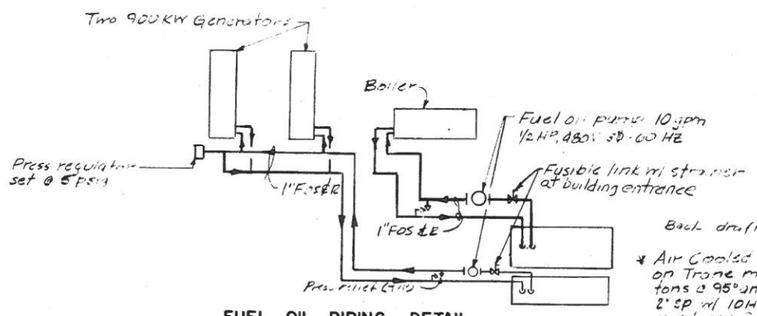

FUEL OIL PIPING DETAIL

NO SCALE

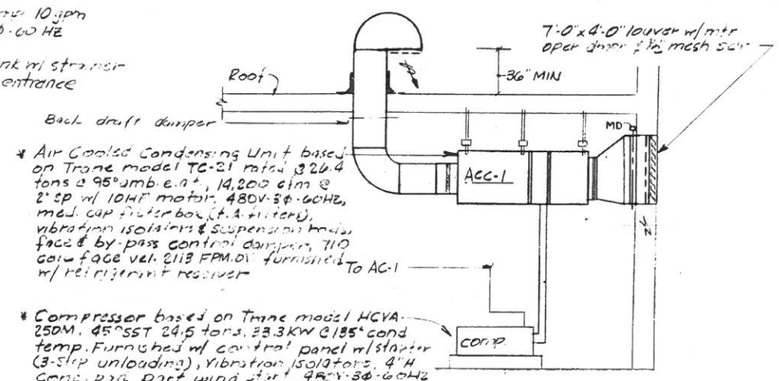

* Air Cooled Condensing Unit based on Trane model TC-21 rated @ 26.4 tons @ 95° amb. e.a.t., 14,200 cfm @ 2" SP w/ 10 HP motor, 480V-3Φ-60HZ, med. cap filter box (f.a. filters), vibration isolators & suspension hooks, face & by-pass control damper, 710 coil face vel. 2113 FPM.01 furnished w/ refrigerant receiver

* Compressor based on Trane model HCVA-250M, 45° SST 24.5 tons, 33.3 KW @ 85° cond temp. Furnished w/ control panel w/ starter (3-step unloading), vibration isolators, 4" H conc. pad, part wind start 460V-3Φ-60HZ 47 FLA, 120 LRA

* Similar mfg. Carrier or equal

SECTION KZ 35

H-01312-1

S·E·A Consultants Inc.
Engineers / Planners
BOSTON, MASSACHUSETTS
ROCHESTER, NEW HAMPSHIRE

REVISIONS

SCALE 1/8" = 1'-0"
DATE FEB. 1976
JOB NO 213-7401
DESIGNED BY LA
DRAWN BY LA
CHECKED BY LG
APPROVED BY
SHEET 35 OF 133

NEW HAMPSHIRE WATER SUPPLY AND POLLUTION CONTROL COMMISSION
WINNIPESAUKEE WATER POLLUTION ABATEMENT PROGRAM
Franklin Wastewater Treatment Facility
OPERATIONS BUILDING - HVAC 3
PLAN - SECOND FLOOR

GENERAL ABBREVIATIONS

A	ACC	AIR COOLED CONDENSER
	ACU	AIR CONDITIONER UNIT (W/DX OR CHILL. WTR COILS)
	AFF	ABOVE FINISHED FLOOR
	AG	ABOVE GRADE
	AHU	AIR HANDLING UNIT
	ALT	ALTITUDE
	AP	ACCESS PANEL
	AD	ACCESS DOOR
	ATC	AUTOMATIC TEMPERATURE CONTROL
	AUTO	AUTOMATIC
	AUX	AUXILIARY
	AVG	AVERAGE
	AV	AUTOMATIC AIR RELEASE VENT
B	B TO B	BACK TO BACK
	BHP	BRAKE HORSEPOWER
	BOT	BOTTOM
	BTU	BRITISH THERMAL UNIT
	BBD	BACK DRAFT SELF ACTING DAMPER
	BBH	BASE BOARD HEATER
C	C TO C	CENTER TO CENTER
	CCW	COUNTER CLOCKWISE
	CENT	CENTRIFUGAL
	CFM	CUBIC FEET PER MINUTE
	CGP	CHILLED WTR GLYCOL PUMP
	CHIL	CHILLER (WTR OR AIR COOLED)
	CL	CENTER LINE
	CLG	CEILING
	CLR	CLEAR
	COL	COLUMN
	CTR	CENTER
	CV	VALVE FLOW COEFFICIENT
	CW	CLOCKWISE
D	D	TO DRAIN (NEAREST)
	DG	DOOR GRILLE
	DB	DRY BULB
	DIA	DIAMETER
	DISCH	DISCHARGE
	DN	DOWN
	DWG	DRAWING
	DX	DIRECT EXPANSION COIL
E	EUH	ELECTRIC UNIT HEATER
	EA	EACH
	EF	EXHAUST FAN
	ENT	ENTERING
	ELEC	ELECTRICAL
	ELEV	ELEVATION
	EMERG	EMERGENCY
	EXH	EXHAUST
	EXP	EXPANSION/COMPRESSION TANK
F	F	FARENHEIT
	FBV	FLOW BALANCE & SHUTOFF VALVE
	FC	FLEX CONNECTION
	FD	FIRE DAMPER
	FG	FLOOR GRILLE
	FLR	FLOOR
	FLG	FLANGE
	FOB	FLAT ON BOTTOM
	FOT	FLAT ON TOP
	FPM	FEET PER MINUTE
	FD	FIRE DAMPER
	FS	FLOW SENSOR
	FTR	FIN-TUBE RADIATION
G	GPM	GALLONS PER MINUTE
H	H-O-A	HAND-OFF-AUTO
	HP	HORSEPOWER
	H&V	HEATING AND VENTILATING
	HVAC	HEATING, VENTILATING AND AIR CONDITIONING
	HV	HEATING, VENTILATING AND AIR CONDITIONING UNIT
	HZ	HERTZ
I	ID	INSIDE DIAMETER
	INS	INSULATE,INSULATION
	INSTR	INSTRUMENT(ATION)
L	LAT	LEAVING AIR TEMPERATURE
	LWT	LEAVING WATER TEMPERATURE
	LVG	LEAVING
M	M	MOTOR
	MBH	THOUSAND BTU PER HOUR
	MATL	MATERIAL
	MAX	MAXIMUM
	MCC	MOTOR CONTROL CENTER
	MECH	MECHANICAL
	MFR	MANUFACTURER
	MIN	MINIMUM
	MISC	MISCELLANEOUS
	MTD	MOUNTED
N	NC	NORMALLY CLOSED
	NO	NORMALLY OPEN
	NOM	NOMINAL
	NPT	AMERICAN NATIONAL TAPER PIPE THREAD
	NTS	NOT TO SCALE
O	OA	OUTSIDE AIR
	OC	ON CENTER
	OD	OUTSIDE DIAMETER
	OPP	OPPOSITE
P	P	PUMP
	PSI	POUNDS PER SQUARE IN
	PSIA	PSI ABSOLUTE
	PSIG	PSI GUAGE
R	RA	RETURN AIR
	RF	RETURN FAN
	REG	REGISTER
	RH	RELATIVE HUMIDITY
	RPM	REVOLUTIONS PER MINUTE
	RED	REDUCER
S	SA	SUPPLY AIR
	SF	SUPPLY FAN
	SCH	SCHEDULE
	SP	STATIC PRESSURE
	SPEC	SPECIFICATION
	SS	STAINLESS STEEL
T	TF	TRANSFER FAN
	TD	TEMPERATURE DIFFERENCE
	TEMP	TEMPERATURE
	TOS	TOP OF STEEL
	TXV	THERMAL EXPANSION VALVE
U	U	HEAT TRANSFER COEFFICIENT
	UH	UNIT HEATER
	UL	UNDERWRITERS LABORATORY
V	V	VOLTS
	VAV	VARIABLE AIR VOLUME
	VEL	VELOCITY
W	W/	WITH
	W/O	WITHOUT
	WB	WET BULB
	WG	WALL GRILLE

SYMBOLS
VALVES

- UNCLASSIFIED. TYPE AS SHOWN ON THE DRAWINGS ADJACENT TO SYMBOL
- FLOW METER
- GATE VALVE
- GLOBE VALVE
- NEEDLE VALVE
- BALL VALVE
- 3-WAY BALL VALVE
- CONE VALVE
- PINCH VALVE
- DIAPHRAGM VALVE
- FLOW BALANCING AND SHUTOFF VALVE
- BUTTERFLY VALVE
- PLUG VALVE
- 3-WAY PLUG VALVE
- 4-WAY PLUG VALVE
- CHECK VALVE, GENERAL SYMBOL
- BALL CHECK VALVE
- DOUBLE DOOR CHECK VALVE
- S — SOLENOID VALVE
- S — 3-WAY SOLENOID VALVE
- ANGLE VALVE
- PRESSURE CONTROL VALVE (SELF CONTAINED)
- PRESSURE CONTROL VALVE (ACTIVATED BY STEAM PRESSURE)
- DIFFERENTIAL PRESSURE REDUCING REGULATOR WITH INTERNAL AND EXTERNAL PRESSURE TAPS
- 2-WAY CONTROL VALVE
- A AB B — 3-WAY MIXING VALVE
- 3-WAY MIXING VALVE
- AV — AUTOMATIC AIR RELEASE VENT
- GATE VALVE (NC) WITH HOSE CONNECTOR

SYMBOLS
PIPE FITTINGS

- CAP
- BOTTOM CONNECTION
- TOP CONNECTION
- ELBOW UP
- ELBOW DOWN
- REDUCER-CONCENTRIC
- REDUCER-ECCENTRIC STRAIGHT INVERT
- REDUCER-ECCENTRIC STRAIGHT CROWN
- TEE
- TEE UP
- TEE DOWN
- UNION-SCREWED
- UNION-FLANGED

SPECIALTIES

- ALIGNMENT GUIDE
- PA — ANCHOR
- H — HUMIDISTAT
- P — PRESSURE GAGE AND COCK
- STRAINER
- THERMOMETER
- PD — PRESS. DIFF. W/ INDICATOR LIGHT & REMOTE ALARM @ ATC
- T — THERMOSTAT
- S — SMOKE SENSOR
- FS — FLOW SENSOR
- TO SPACE
- FROM SPACE
- 1/2" UC 100 CFM — UNDERCUT DOOR
- 20X12 LD OR DG 200 CFM — LOUVER DOOR OR DOOR GRILLE

SYMBOLS DUCTWORK

- MANUAL VOLUME DAMPER
- FIRE DAMPER ▲-1.5(1-1/2HR RATED)
- MOTOR OPERATED DAMPER
- DIRECTION OF FLOW
- 12X20 — DUCT SIZE- FIRST NUMBER IS SIDE SHOWN
- 20X12 — DUCT SECTION,POSITIVE PRESS. FIRST NUMBER IS TOP
- 20X12 — DUCT SECTION,NEGATIVE PRESS. FIRST NUMBER IS TOP
- R — ELEVATION CHANGE (R) RISE, (D) DROP
- AD — ACCESS DOOR
- FLEXIBLE CONNECTION
- FLEXIBLE DUCT
- DUCT LINING
- 20x12 16x8 — TRANSITON
- TURNING VANES
- 12x20 — SIDE MOUNTED DEVICE
- BOTTOM MOUNTED DEVICE

GENERAL NOTES:

1. HVAC EQUIPMENT DIMENSIONS, LOCATIONS, DUCTWORK AND PIPING SYSTEM LAYOUTS ARE BASED ON EQUIPMENT SELECTED BY THE ENGINEER. IF THE CONTRACTOR PROPOSES TO FURNISH EQUIPMENT THAT REQUIRES AN ARRANGEMENT OR SPACE DIFFERING FROM THAT INDICATED ON THE DRAWINGS OR SPECIFIED, THE CONTRACTOR SHALL PREPARE AND SUBMIT TO THE ENGINEER FOR APPROVAL, DETAILED ARCHITECTURAL, STRUCTURAL, MECHANICAL, PLUMBING, INSTRUMENTATION, HVAC AND ELECTRICAL DRAWINGS AND EQUIPMENT LISTS SHOWING ALL NECESSARY CHANGES AND EMBODYING ALL FEATURES OF THE EQUIPMENT HE PROPOSES TO FURNISH. THIS INFORMATION SHALL INCLUDE BUT NOT BE LIMITED TO PLANS, SECTIONS, DETAILS, AND SCHEMATICS OF ALL APPURTENANCES REQUIRED. SUCH CHANGES IF APPROVED BY THE ENGINEER SHALL BE AT NO EXTRA COST TO THE OWNER. THE CONTRACTOR SHALL ASSUME THE COST OF, AND THE RESPONSIBILITY FOR SATISFACTORILY ACCOMPLISHING ALL THE NECESSARY CHANGES CORRESPONDING TO THE DIMENSIONS AND CHARACTERISTICS OF THE EQUIPMENT SUBMITTED AND APPROVED BY THE ENGINEER. REFER TO SPECIFICATIONS FOR FUTHER DETAILS.
2. SIZES OF EQUIPMENT PADS INDICATED ON THE DRAWINGS ARE APPROXIMATE. EXACT DIMENSIONS SHALL BE DETERMINED BY THE CONTRACTOR FOR THE EQUIPMENT FURNISHED. ALL FLOOR MOUNTED EQUIPMENT SHALL BE SET ON CONCRETE PADS CONFORMING TO DETAILS SHOWN ON THE STRUCTURAL DRAWINGS.
3. DIELECTRIC COUPLINGS, FLANGES OR UNIONS SHALL BE INSTALLED AT ALL CONNECTIONS OF COPPER PIPE TO OTHER TYPES OF METALLIC PIPING.
4. HVAC PIPING AND DUCTWORK DRAWINGS DO NOT SHOW ALL DRAINS, VENTS, OFFSETS AND FITTINGS ETC. REQUIRED FOR THE COMPLETE SYSTEM SMALL PIPING IS SHOWN APPROXIMATELY TO SCALE BUT NOT EVERY FITTING AND OFFSET IS SHOWN. SOME VALVES AND APPURTENANCES MAY BE OMITTED FOR THE SAKE OF CLARITY. THE CONTRACTOR SHALL FURNISH, INSTALL AND TEST ALL HVAC SYSTEMS SHOWN ON THE DRAWINGS AND DETAILS, AND/OR AS DEFINED IN THE SPECIFICATIONS TO PROVIDE THE COMPLETE SYSTEM.
5. UNLESS OTHERWISE SHOWN ON THE DRAWING ALL FLOOR SLAB AND WALL PENETRATIONS SHALL BE AS SHOWN ON THE WALL PENETRATION DETAILS. ABOVE GROUND EXTERIOR WALL AND ROOF PENETRATIONS SHALL BE AS SHOWNS ON THE ARCHITECTURAL DRAWINGS. IF APPROVED BY THE ENGINEER, THE CONTRACTOR MAY SUBSTITUTE ALTERNATE METHODS PROVIDING THEY MEET INTENDED DESIGN REQUIREMENTS.
6. NOT ALL AND ONLY CERTAIN TYPES OF SUPPORTS ARE SHOWN ON THE HVAC DRAWINGS. UNLESS OTHERWISE DETAILED ON THE DRAWINGS ALL PIPE AND DUCT SUPPORTS SHALL BE DESIGNED, FURNISHED AND INSTALLED BY THE CONTRACTOR AS SPECIFIED AND TO THE APPROVAL OF THE ENGINEER.

NOTE: THIS IS A GENERAL LIST OF SYMBOLS AND ABBREVIATIONS.NOT ALL ITEMS SHOWN HERE APPEAR ON THE CONTRACT DRAWINGS.

PIPE MATERIAL CODES

CU	COPPER
FRP	FIBER REINFORCED PLASTIC
GS	GALVANIZED STEEL
PVC	POLYVINYL CHLORIDE
STL	BLACK STEEL

FLOW STREAM CODE

CWR	CHILLED WATER RETURN
CWS	CHILLED WATER SUPPLY
D	DRAIN
HWR	HOT WATER RETURN
HWS	HOT WATER SUPPLY
RS	REFRIGERANT SUPPLY
RL	REFRIGERANT LIQUID
RG	REFRIGERANT-HOT GAS
PW	PLANT WATER
SW	SERVICE WATER (PROTECTED WATER)

REGISTERS GRILLES AND DIFFUSERS

EG	EXHAUST GRILLE
ER	EXHAUST REGISTER
RG	RETURN GRILLE
RR	RETURN REGISTER
SD	SUPPLY DIFFUSER
SG	SUPPLY GRILLE
SR	SUPPLY REGISTER
TG	TRANSFER GRILLE
WG	WALL GRILLE

TYPICAL TAG

TYPE OF DEVICE		
EG	20X20	SIZE
	400CFM	CAPACITY

RECORD DRAWING

THIS RECORD DRAWING HAS BEEN PREPARED BASED ON A COMBINATION OF INFORMATION PROVIDED BY OTHERS AND BY CDM. THEREFORE, THE ENGINEER HAS NOT VERIFIED THE ACCURACY OF ALL THE INFORMATION. TO THE BEST OF THE ENGINEER'S BELIEF AND KNOWLEDGE, THE INCLUDED RECORD INFORMATION IS REASONABLY ACCURATE.

By Joel Irish Date 6-9-08

CDM

DATE	DRWN	CHKD	REMARKS

DESIGNED BY: J. COMPONESCHI
DRAWN BY: J. COMPONESCHI
SHEET CHK'D BY: J. JACOBS
CROSS CHK'D BY: X
APPROVED BY:
DATE: FEBRUARY, 2006

CDM Camp Dresser & McKee Inc.

STATE OF NEW HAMPSHIRE
DEPARTMENT OF ENVIRONMENTAL SERVICES
WINNIPESAUKEE RIVER BASIN PROGRAM

FRANKLIN WASTEWATER TREATMENT FACILITY
DEWATERING IMPROVEMENTS

LEGENDS AND SYMBOLS

PROJECT NO. 1061-39869
FILE NAME: HABLG001.DWG

SHEET NO.
H-1

ACCESSION NO. 1061-68680

HOT WATER PIPING NOTES:
1. RUN 2½" HWS & HWR TIGHT TO CEILING.
2. LOCATE COIL VALVE BANK AT ACCESS HEIGHT ON NORTH WALL.
3. RUN PIPING TO CONNECTION ON SECOND FLOOR AS SHOWN ON FLOW DIAGRAM

PLANT WATER PIPING NOTES:
1. RUN 1½" PW TIGHT TO CEILING.
2. PROVIDE SOLENOID VALVE ON DRAIN LINE OF COIL TO ALLOW COIL DRAINAGE WHEN NOT IN USE.

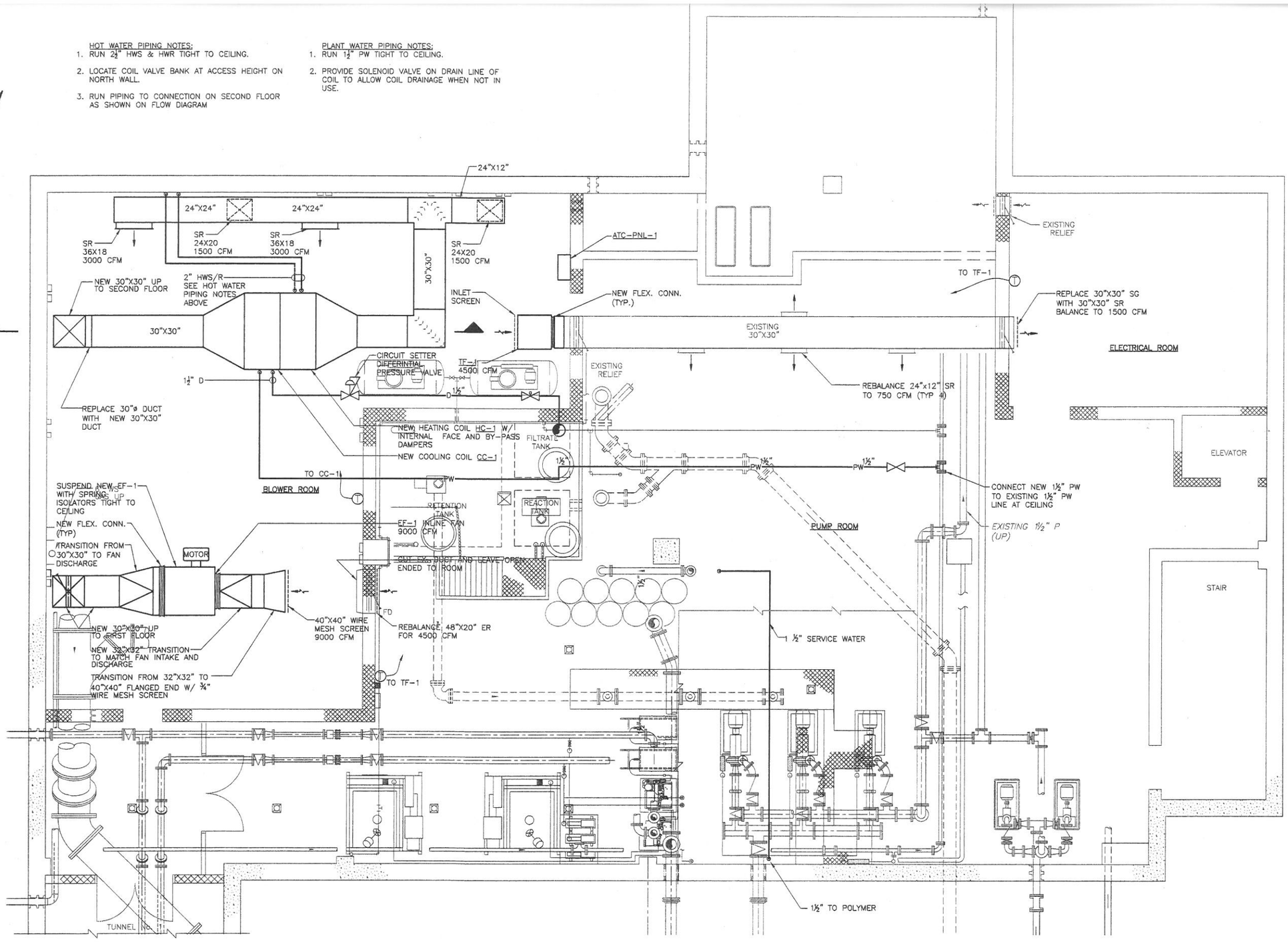

PART PLAN – EL. 252.0

PLAN

1/4" = 1'- 0"

2 1 0 2 4

RECORD DRAWING

THIS RECORD DRAWING HAS BEEN PREPARED BASED ON A COMBINATION OF INFORMATION PROVIDED BY OTHERS AND BY CDM. THEREFORE, THE ENGINEER HAS NOT VERIFIED THE ACCURACY OF ALL THE INFORMATION. TO THE BEST OF THE ENGINEER'S BELIEF AND KNOWLEDGE, THE INCLUDED RECORD INFORMATION IS REASONABLY ACCURATE.

By Joel Irish Date 6-9-08

CDM

DATE	DRWN	CHKD	REMARKS

DESIGNED BY: J. JACOBS
DRAWN BY: K. RADEMACHER
SHEET CHK'D BY: J. JACOBS
CROSS CHK'D BY: X
APPROVED BY:
DATE: FEBRUARY, 2006

CDM Camp Dresser & McKee Inc.
consulting engineering construction operations

STATE OF NEW HAMPSHIRE
DEPARTMENT OF ENVIRONMENTAL SERVICES
WINNIPESAUKEE RIVER BASIN PROGRAM
FRANKLIN WASTEWATER TREATMENT FACILITY
DEWATERING IMPROVEMENTS

EXISTING OPERATIONS BUILDING
DEMOLITION AND MODIFICATION
BASEMENT EQUIPMENT AND PIPING PLAN

PROJECT NO. 1061-39869
FILE NAME: \HVAC\HOBPLD01
SHEET NO.
H - 2
ACCESSION NO. 1061-68681

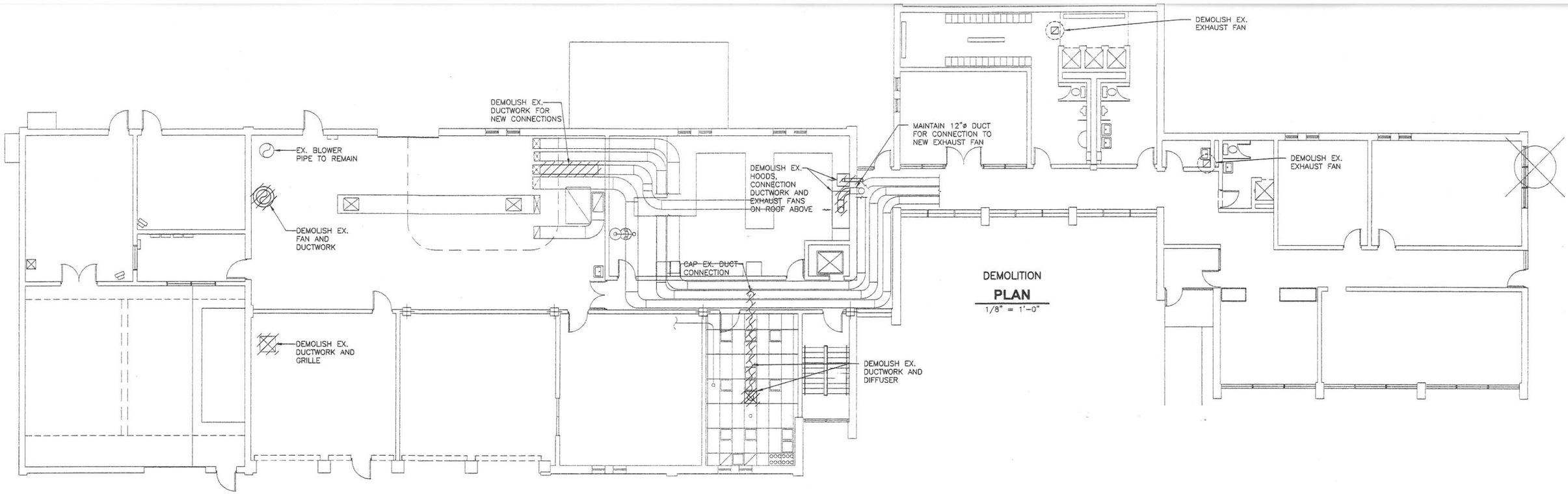

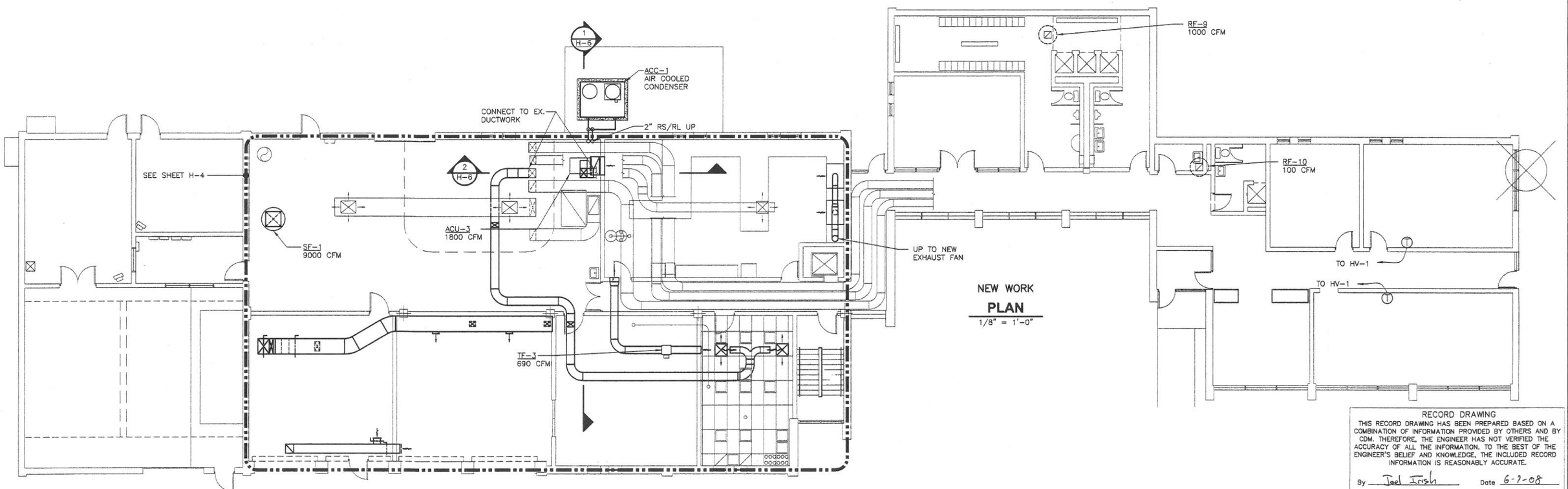

RECORD DRAWING

THIS RECORD DRAWING HAS BEEN PREPARED BASED ON A COMBINATION OF INFORMATION PROVIDED BY OTHERS AND BY CDM. THEREFORE, THE ENGINEER HAS NOT VERIFIED THE ACCURACY OF ALL THE INFORMATION. TO THE BEST OF THE ENGINEER'S BELIEF AND KNOWLEDGE, THE INCLUDED RECORD INFORMATION IS REASONABLY ACCURATE.

By Joel Irish Date 6-2-08

CDM

DESIGNED BY: P.D. SMITH
DRAWN BY: D. FLAHERTY
SHEET CHK'D BY:

CDM Camp Dresser & McKee Inc.
consulting engineering construction

STATE OF NEW HAMPSHIRE
DEPARTMENT OF ENVIRONMENTAL SERVICES
WINNIPESAUKEE RIVER BASIN PROGRAM

EXISTING OPERATIONS BUILDING
FIRST FLOOR

PROJECT NO. 1061-39869
FILE NAME: HOBPL002.DWG
SHEET NO.

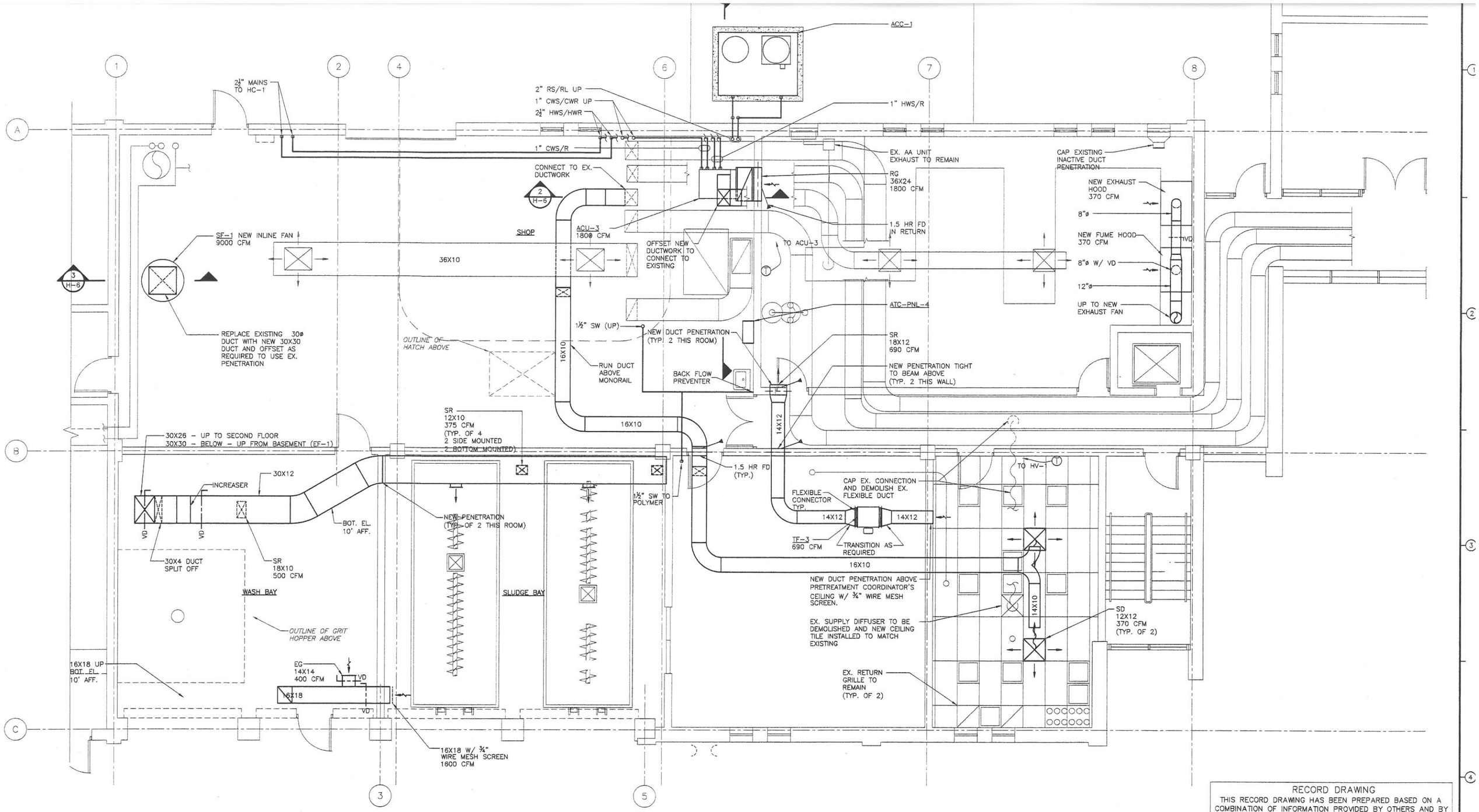

PART PLAN - EL. 274.0

PLAN

1/4" = 1'- 0"

RECORD DRAWING

THIS RECORD DRAWING HAS BEEN PREPARED BASED ON A COMBINATION OF INFORMATION PROVIDED BY OTHERS AND BY CDM. THEREFORE, THE ENGINEER HAS NOT VERIFIED THE ACCURACY OF ALL THE INFORMATION. TO THE BEST OF THE ENGINEER'S BELIEF AND KNOWLEDGE, THE INCLUDED RECORD INFORMATION IS REASONABLY ACCURATE.

By Joel Irish Date 6-9-08

CDM

DATE	DRWN	CHKD	REMARKS

DESIGNED BY: K. RADEMACHER
DRAWN BY: J. COMPONESCHI
SHEET CHK'D BY: J. JACOBS
CROSS CHK'D BY: P.D. SMITH
APPROVED BY:
DATE: FEBRUARY, 2006

CDM Camp Dresser & McKee Inc.

STATE OF NEW HAMPSHIRE
DEPARTMENT OF ENVIRONMENTAL SERVICES
WINNIPESAUKEE RIVER BASIN PROGRAM

FRANKLIN WASTEWATER TREATMENT FACILITY
DEWATERING IMPROVEMENTS

EXISTING OPERATIONS BUILDING
DEMOLITION AND MODIFICATION
FIRST FLOOR HVAC PART PLAN

PROJECT NO. 1061-39869
FILE NAME: \HVAC\HOBPLD02

SHEET NO.
H-4

ACCESSION NO. 1061-68683

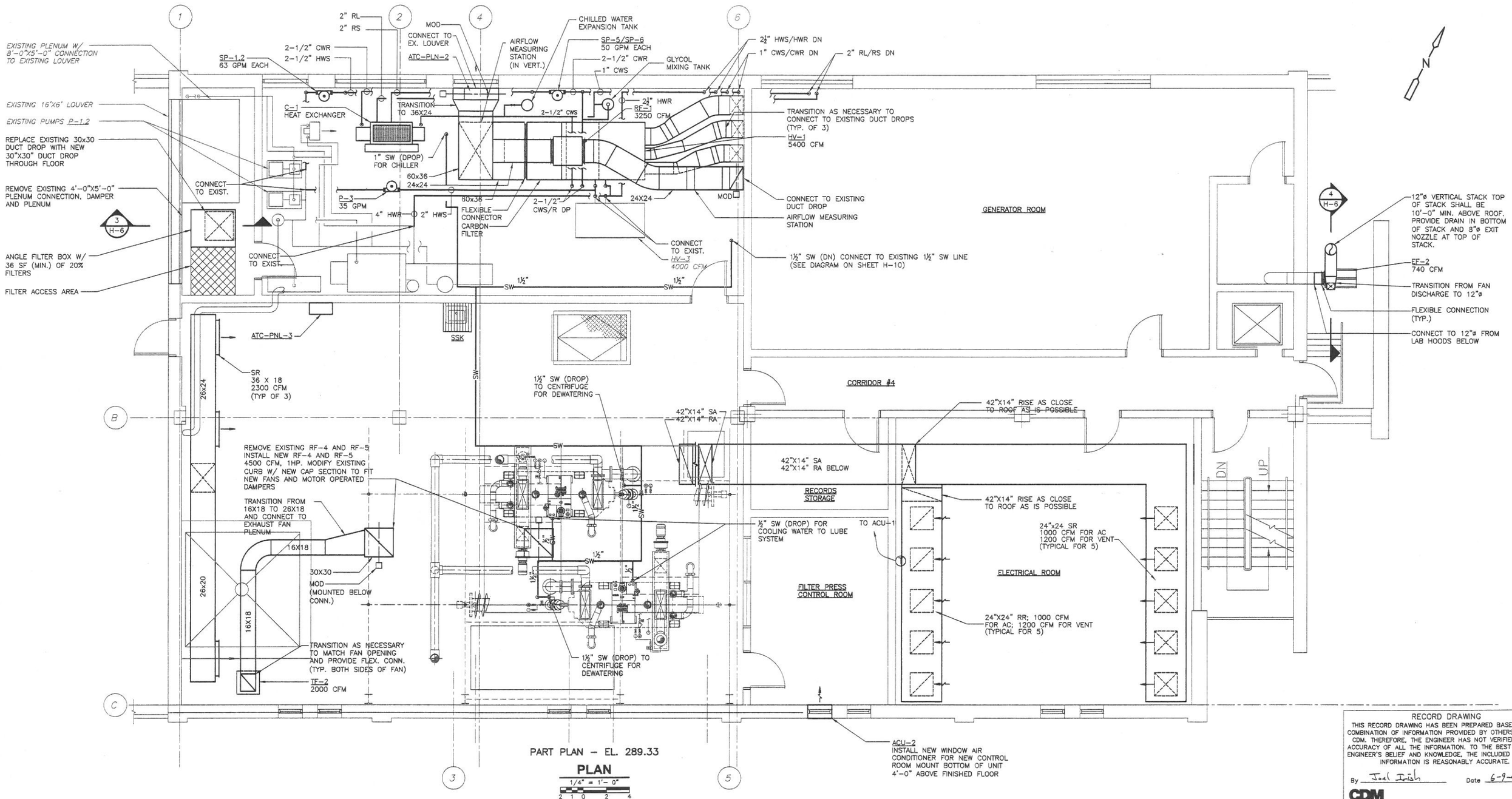

PART PLAN – EL. 289.33

PLAN

1/4" = 1'- 0"

RECORD DRAWING

THIS RECORD DRAWING HAS BEEN PREPARED BASED ON COMBINATION OF INFORMATION PROVIDED BY OTHERS AND CDM. THEREFORE, THE ENGINEER HAS NOT VERIFIED THE ACCURACY OF ALL THE INFORMATION. TO THE BEST OF TH ENGINEER'S BELIEF AND KNOWLEDGE, THE INCLUDED RECOR INFORMATION IS REASONABLY ACCURATE.

By Joel Irish Date 6-9-08

CDM

REV. NO.	DATE	DRWN	CHKD	REMARKS

DESIGNED BY: J. JACOBS
DRAWN BY: K. RADEMACHER
SHEET CHK'D BY: J. JACOBS
CROSS CHK'D BY: P.D. SMITH
APPROVED BY:
DATE: FEBRUARY, 2006

CDM Camp Dresser & McKee Inc.

STATE OF NEW HAMPSHIRE
DEPARTMENT OF ENVIRONMENTAL SERVICES
WINNIPESAUKEE RIVER BASIN PROGRAM

FRANKLIN WASTEWATER TREATMENT FACILITY
DEWATERING IMPROVEMENTS

EXISTING OPERATIONS BUILDING
SECOND FLOOR
HVAC PLAN

PROJECT NO. 1061-3
FILE NAME: HOBPL00

SHEET NO.
H-5

ACCESSION NO. 1061-68

Filename: P:\1061\39869\HVAC\HOBPL003.DWG Xref's: [C24X36H, SOBPL100, MOBWP289, HOBWP001,] Plotted by: FLAHERTYDM Time: 2/9/20

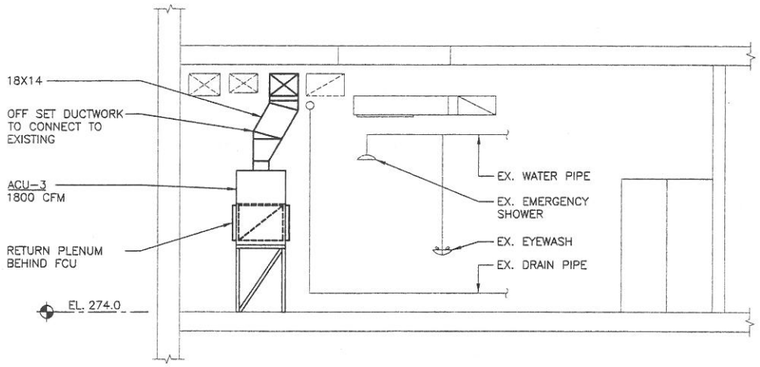

SECTION 1
1/4" = 1'-0" H-3, H-4

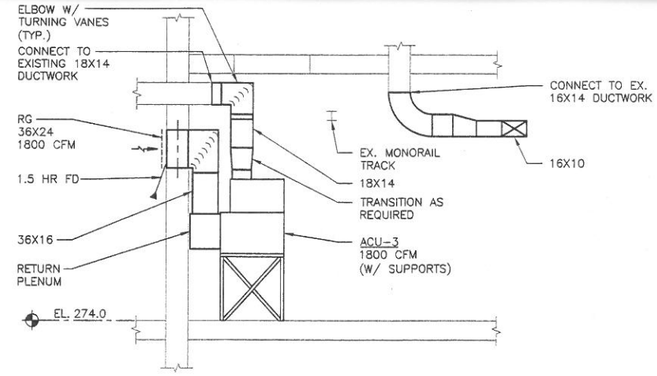

SECTION 2
1/4" = 1'-0" H-3, H-4

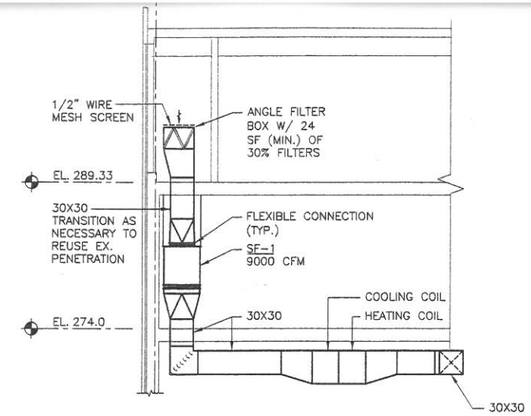

SECTION 3
1/8" = 1'-0" H-2, H-3, H-4

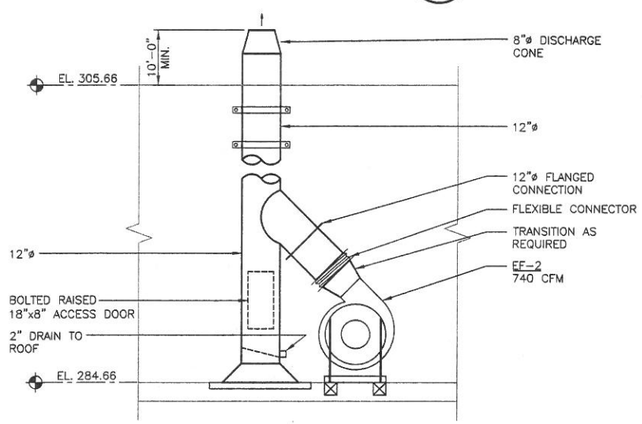

SECTION 4
1/2" = 1'-0" H-5

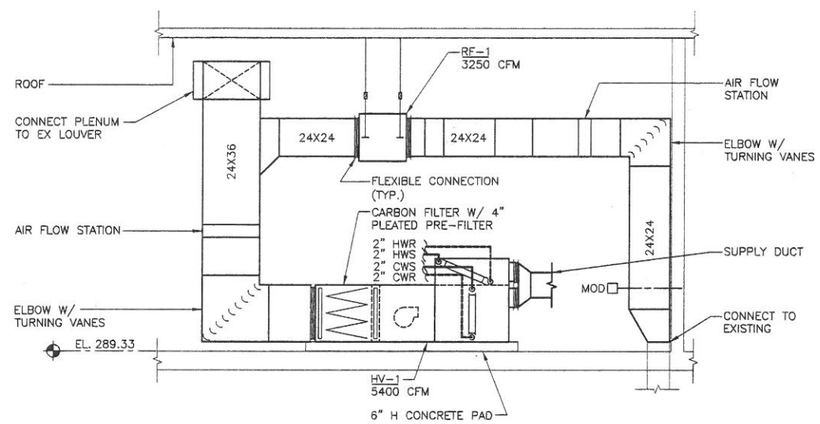

SECTION 5
1/4" = 1'-0" H-5

NOTE:
MOUNT FANS RF-1 AND SF-1 ON REINFORCED COLLARS EXTENDED 16" UP FROM TOP OF DUCT MOUNT TWO POSITION VENTILATION DAMPER IN COLLAR BETWEEN DUCT AND FAN

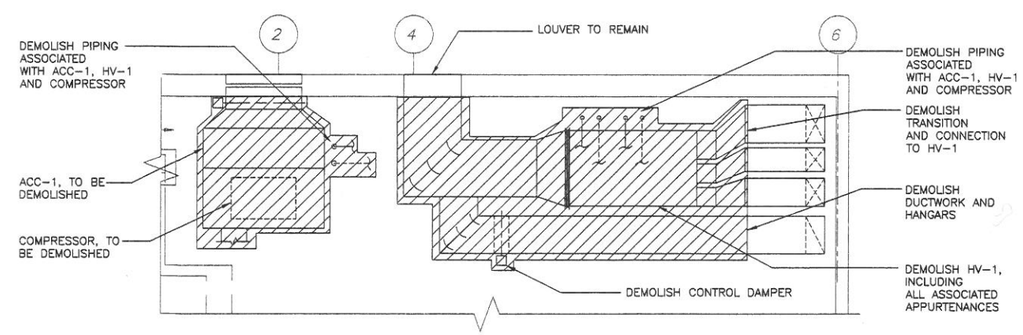

DEMOLITION
PART PLAN EL. 289.33
PLAN
1/4" = 1'-0"

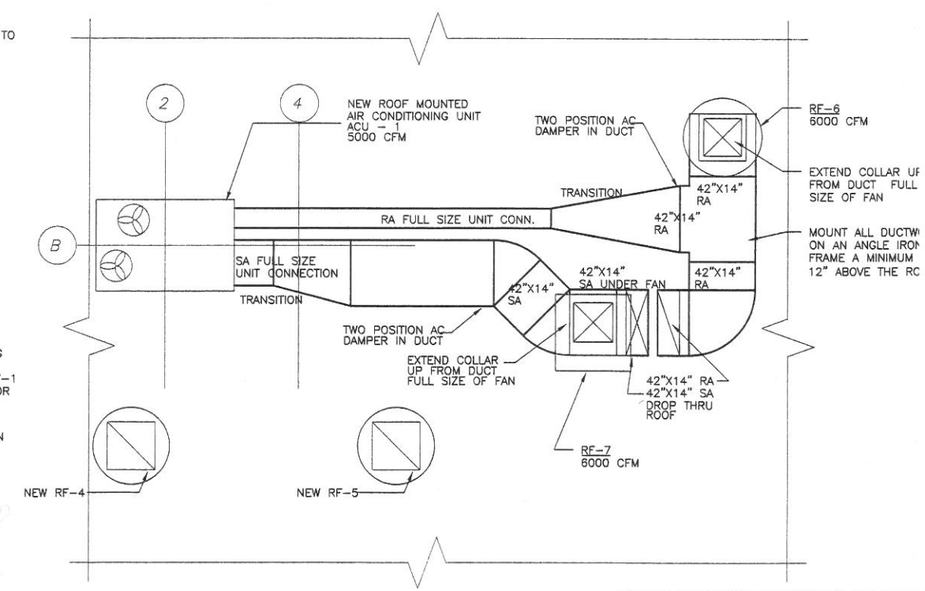

PART ROOF PLAN – EL. 305.66
PLAN
1/4" = 1'- 0"
2 1 0 2 4

RECORD DRAWING
THIS RECORD DRAWING HAS BEEN PREPARED BASED ON COMBINATION OF INFORMATION PROVIDED BY OTHERS AN CDM. THEREFORE, THE ENGINEER HAS NOT VERIFIED TH ACCURACY OF ALL THE INFORMATION. TO THE BEST OF ENGINEER'S BELIEF AND KNOWLEDGE, THE INCLUDED REC INFORMATION IS REASONABLY ACCURATE.
By Joel Irish Date 6-9-08
CDM

REV. NO.	DATE	DRWN	CHKD	REMARKS

DESIGNED BY: P.D. SMITH
DRAWN BY: D. FLAHERTY
SHEET CHK'D BY:
CROSS CHK'D BY:
APPROVED BY:
DATE: FEBRUARY, 2006

CDM Camp Dresser & McKee Inc.
consulting engineering construction operations

STATE OF NEW HAMPSHIRE
DEPARTMENT OF ENVIRONMENTAL SERVICES
WINNIPESAUKEE RIVER BASIN PROGRAM
FRANKLIN WASTEWATER TREATMENT FACILITY
DEWATERING IMPROVEMENTS

EXISTING OPERATIONS BUILDING
HVAC MODIFICATIONS
PART PLANS AND SECTIONS

PROJECT NO. 1061-
FILE NAME: HOBPLO
SHEET NO.
H-6
ACCESSION NO. 1061-6

Filename: P:\1061\39869\HVAC\HOBPL004.DWG Xref's: [C24X36H, HOBWP000, HOBWP000,] Plotted by: FLAHERTYDM Time: 2/9/