COGNITIVE SCIENCE 12, 563–586 (1988)

Observed Methods for Generating Analogies in Scientific Problem Solving

JOHN CLEMENT
University of Massachusetts

Evidence from videotapes of experts thinking aloud is presented which documents the spontaneous use of analogies in scientific problem solving. Four processes appear to be important in using an analogy: (1) generating the analogy; (2) establishing confidence in the validity of the analogy relation; (3) understanding the analogous case; and (4) applying findings to the original problem. This study concentrates on process (1). Evidence was found for three different methods of analogy generation: generation via a principle (1 case), generation via an association (8 cases), and generation via a transformation (18 cases). Although the mechanism underlying analogy generation is usually described as an association process, transformation processes, where the subject modifies or transforms some aspect of the original problem, may be just as important if not more important. In contrast to the usual view of an analogous case as already residing in memory, several of the analogous cases were quite novel, indicating that they were newly invented Gedanken experiments. The usefulness of some analogies appears to lie in a "provocative" function of activating additional knowledge schemas that is different from the commonly cited "direct transfer" function where established knowledge is transferred fairly directly from the analogous to the original case.

A number of investigators have discussed the important role of analogical reasoning in science (Dreistadt, 1968; Gentner, 1982; Hesse, 1966; Nagel, 1961) and education (Brown, Collins, & Harris, 1978; diSessa, 1983; Rumelhart & Norman, 1980; VanLehn & Brown, 1979). It has been argued that analogies can play an important role in the creation of new theoretical hypotheses in science. In some cases these hypotheses can become established analogue models, such as the "billard ball" model for gases. In education, analogical reasoning may be important in the learning of such models and in the transfer of learned knowledge to new, unfamiliar situations. Previous investigations have also related analogical reasoning to problem solving (Gick & Holyoak, 1980; Polya, 1954; Schon, 1979; Wertheimer, 1959),

This research was supported by grants from the National Science Foundation, MDR 8470579 and SED80-16567.

Correspondence and requests for reprints should be sent to John Clement, Scientific Reasoning Research Institute, University of Massachusetts, Amherst, MA 01002.

15516709, 1988, 4, Downloaded from https://onlinelibrary.wiley.com/doi/10.1207/s15516709cog1204_3, Wiley Online Library on [27/02/2023]. See the Terms and Conditions (https://onlinelibrary.wiley.com/terms-and-conditions) on Wiley Online Library for rules of use; OA articles are governed by the applicable Creative Commons License

measures of intelligence (Sternberg, 1977), and the development of concepts (Lakoff & Johnson, 1980).

Discussions of the role of analogical reasoning in science have been based largely on philosophical analysis or on historical evidence. More recently, a few studies have included reports from scientists attempting to recall the sequence of developments in their own ideas (Knorr, 1980; Krueger, 1981). An attempt is made in this paper to provide an initial body of more direct evidence from thinking aloud protocols which captures problem solvers in the act of spontaneously considering an analogous case that was not provided by the experimenter. Here "spontaneous" means self-initiated, and this study contrasts to other studies where the subject is presented with all or part of an analogy and is given the opportunity to use it or complete it. Some of the larger questions motivating this research are: (1) Can one document the spontaneous use of analogies in the problem solving of scientifically trained subjects? (2) Where do spontaneous analogies come from? Can they be generated in more than one way? (3) Are analogous cases always retrieved or are they sometimes invented? (4) Why are analogies sometimes very useful in problem solving? In attempting to make progress on these questions, a major objective of the present study is to construct a set of basic concepts and definitions for classifying and analyzing the phenomena in this area.

The database for this paper comes from videotapes of 10 subjects' solutions to the "spring problem" shown in Figure 1. An example of an analogy for this problem would be to think about the weights hung vertically from long and short elastic bands of the same thickness instead of from wide and narrow springs. Knowing that the larger band will stretch more might suggest that the larger spring will stretch more. A spontaneous analogy occurs when the subject spontaneously shifts attention to a different situation B that he or she believes may be structurally similar to the original problem situation A. (A more precise definition will be developed below.) For example, one subject thought about the saw blade shown in Figure 2a. He felt that a long blade would bend more easily than a short one, and this indicated that the wider spring might stretch more.

In what follows it will often be important to distinguish between two parts of an analogy, the *analogous case* and the *analogy relation*. The analogous case in the above example is the saw blade experiment, and the analogy relation is the relationship being proposed by the subject of a partial equivalence between the original case involving springs and the analogous case involving saw blades.

The correct answer to the spring problem is that the wide spring will stretch farther. This corresponds to most people's initial intuition about the problem. However, carefully answering the question about *why* the wide spring stretches more (and explaining exactly where the restoring force of the spring comes from) is a much more difficult task.

15516709, 1988, 4, Downloaded from https://onlinelibrary.wiley.com/doi/10.1207/s15516709cog1204_3, Wiley Online Library on [27/02/2023]. See the Terms and Conditions (https://onlinelibrary.wiley.com/terms-and-conditions) on Wiley Online Library for rules of use; OA articles are governed by the applicable Creative Commons License

SPRING PROBLEM

A WEIGHT IS HUNG ON A SPRING. THE ORIGINAL SPRING IS REPLACED WITH A SPRING:
--MADE OF THE SAME KIND OF WIRE,
--WITH THE SAME NUMBER OF COILS,
--BUT WITH COILS THAT ARE TWICE AS WIDE IN DIAMETER.

WILL THE SPRING STRETCH FROM ITS NATURAL LENGTH, MORE, LESS, OR THE SAME AMOUNT UNDER THE SAME WEIGHT? (ASSUME THE MASS OF THE SPRING IS NEGLIGIBLE COMPARED TO THE MASS OF THE WEIGHT.)

WHY DO YOU THINK SO?

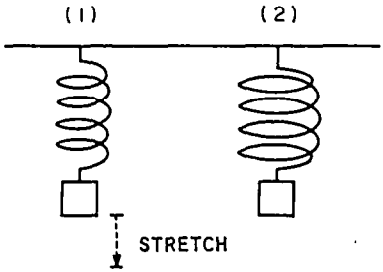

Figure 1. Spring Problem Presented to Subjects

METHOD

Ten experienced problem solvers were asked by the author to think aloud as much as possible while solving the spring problem in Figure 1. All were advanced doctoral students or professors in technical fields. In some instances, an attempt was made to recruit subjects who had a reputation within their department for having done relatively creative work in the past. Five of the subjects were physicists, three were mathematicians, and two were computer scientists. The subjects were told that the purpose of the interview was to study problem-solving methods and were given instructions to solve the problem "in any way that you can." After they reached an answer, subjects were asked to give a rough estimate of confidence in their answer. They were then asked if there was any way they could increase their confidence, and this often led to further work on the problem. Probing by the interviewer was kept to a minimum, usually consisting of a reminder to keep talking. Occasionally the interviewer would ask for clarification of an am-

15516709, 1988, 4, Downloaded from https://onlinelibrary.wiley.com/doi/10.1207/s15516709cog1204_3, Wiley Online Library on [27/02/2023]. See the Terms and Conditions (https://onlinelibrary.wiley.com/terms-and-conditions) on Wiley Online Library for rules of use; OA articles are governed by the applicable Creative Commons License

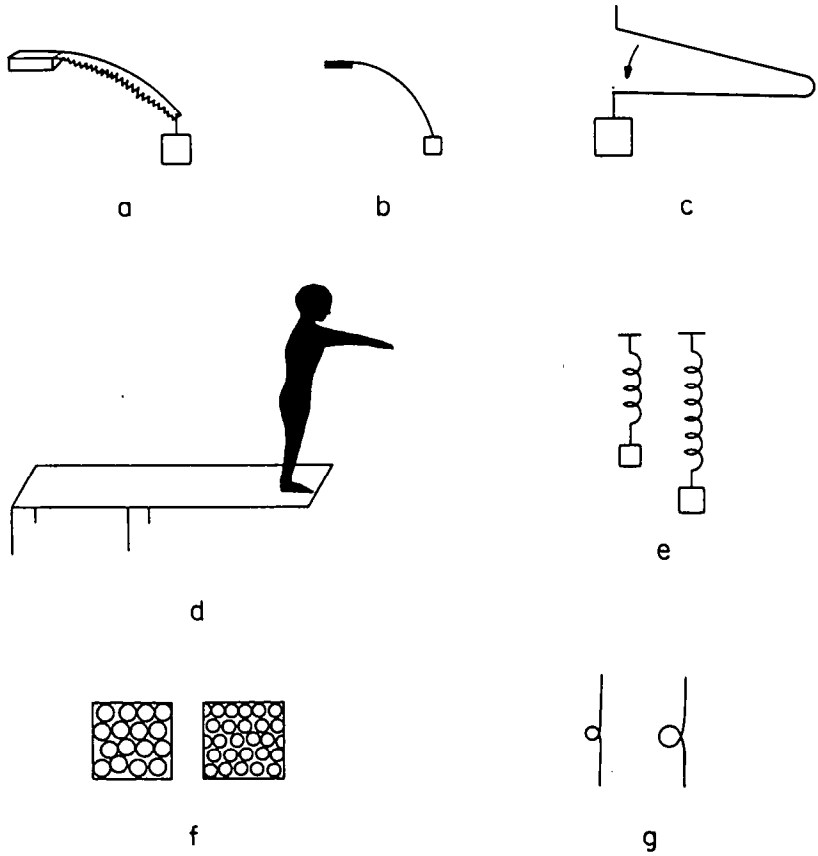

Figure 2. Some Analogies Generated by Subjects Solving the Spring Problem. a. Longer sawblade bends more. b. Longer rod bends more. c. Longer hairpin bends more. d. Longer diving board bends more. e. Longer spring stretches more. f. Foam rubber with larger air holes compresses more. g. Larger kinks in a wire easier to remove.

biguous statement. Most of the sessions were videotaped and all were audiotaped and transcribed.

DEFINITIONS OF BASIC CONCEPTS AND OBSERVATIONS

Identifying Analogous Cases

Definition of "Spontaneous Analogy." In defining criteria for recognizing a "spontaneous analogy," it is desirable for the definition: (1) To include attempts to produce cases that are similar to but different from the original problem situation; (2) To include such attempts whether or not they

15516709, 1988, 4, Downloaded from https://onlinelibrary.wiley.com/doi/10.1207/s15516709cog1204_3, Wiley Online Library on [27/02/2023]. See the Terms and Conditions (https://onlinelibrary.wiley.com/terms-and-conditions) on Wiley Online Library for rules of use; OA articles are governed by the applicable Creative Commons License

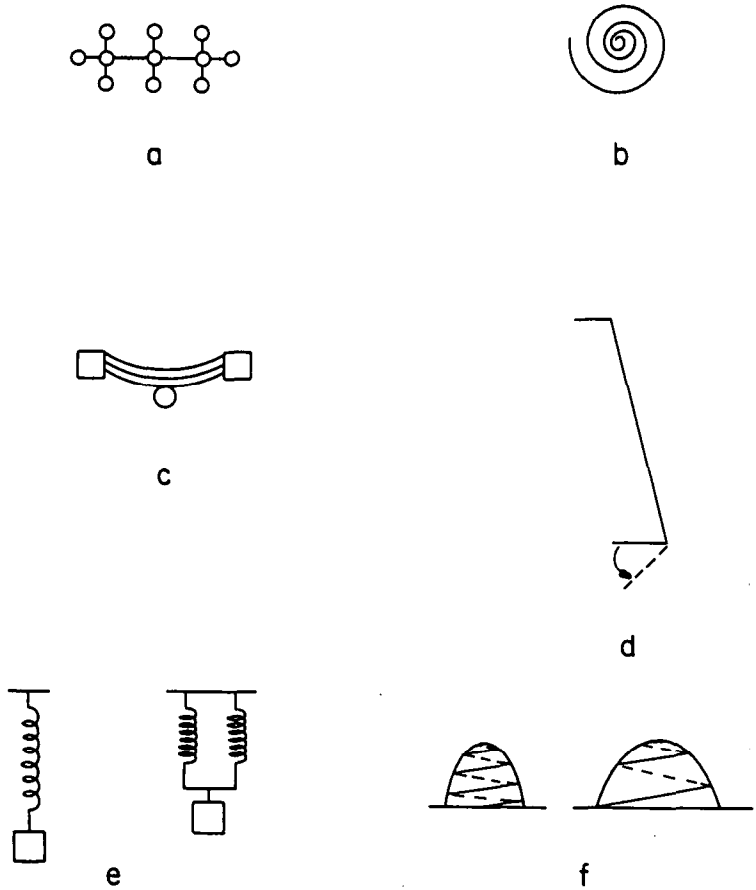

Figure 3. Further Analogies Generated by Subjects Solving the Spring Problem. a. Polyesters. b. Spiral spring in two dimensions. c. Car spring. d. Longer rod twists more under same torque. e. Parallel springs stretch less. f. Car climbs farther per circuit on wider mountain, given the same incline angle, so the wide spring would stretch farther, assuming that the same weight produces the same helix incline.

ultimately yielded an answer to the problem; (3) To rule out trivial cases that involve only a surface similarity without a structural or functional similarity; and (4) Where appropriate, to separate analogy generation from other problem-solving processes such as generating extreme cases, breaking a solution into independent parts, and analyzing the problem in terms of a theoretical principle.

The following observation criteria were used to code for the generation of a spontaneous analogy: (1) The subject, without provocation, refers to another situation B where one or more features ordinarily assumed fixed in

15516709, 1988, 4, Downloaded from https://onlinelibrary.wiley.com/doi/10.1207/s15516709cog1204_3, Wiley Online Library on [27/02/2023]. See the Terms and Conditions (https://onlinelibrary.wiley.com/terms-and-conditions) on Wiley Online Library for rules of use; OA articles are governed by the applicable Creative Commons License

the original problem situation A are different, that is, the analogous case B violates a "fixed feature" of A (to be defined below); (2) The subject indicates that certain structural or functional relationships (as opposed to surface features alone) may be equivalent in A and B; and (3) The related case B is described at approximately the same level of abstraction as A. For example, several subjects attempted to relate the spring problem to the analogy of comparing long and short horizontal wires or rods bent by the same weight as shown in Fibure 2b. (The saw blade in Figure 2a is one variation of this analogy.) Most had a strong intuition that a long rod would bend more than a short rod. They reasoned that since the longer rod would bend more, the wider spring would probably stretch more. This analogy in fact leads to the correct prediction, and provides a plausible initial justification for it. In some instances, a more complicated analogy was constructed (such as a spring with square coils) which led to a more accurate justification of the answer.

As used here, *fixed features* are those features of the problem situation that are commonly assumed to be givens which are not subject to change; and *problem variables* are features that are assumed to be changeable or manipulable. Two aspects that are assumed to be fixed features in the spring problem are the equal thickness of the wire in the two springs and the helical shape of the springs. Aspects that are assumed to be problem variables are coil diameter and amount of stretch. Considering the problem of a horizontal rod, then, represents a change in what was originally a fixed feature (the shape of the spring) in the subject's initial comprehension of the problem. Thus the bending rod can be an analogous case. Effectively, the subject's assumptions about which aspects of the situation are fixed and which are variables determine a stable context or problem representation within which he or she works on the problem. An analogy, then, changes the problem representation being considered.

For example, the following section of S1's transcript documents the generation of the "hairpin" analogy shown in Figure 2c. (Numbers on left are transcript line numbers.)

013 S: The equivalent problem that might have the same answer is—suppose I gave you the problem in a way instead of being a coiled spring, it's a long U spring like that, (draws Figure 2c) just like a hairpin. And now I hang a weight on the hairpin, and see how far it bends down. Now I make the hairpin twice as long with the same wire and see how far it bends down. Now that goes with the cube. That's the deflection in the length of the cantilever beam. (Chuckles) And maybe it comes out that way with the spring. So my—I would bet about, about 2 to 1—I would bet that the answer to this [original spring problem] is that it goes down eight times as far.

The above definition excludes several types of related cases that were *not* counted as analogous. First, when subjects used a simple partition such as

15516709, 1988, 4, Downloaded from https://onlinelibrary.wiley.com/doi/10.1207/s15516709cog1204_3, Wiley Online Library on [27/02/2023]. See the Terms and Conditions (https://onlinelibrary.wiley.com/terms-and-conditions) on Wiley Online Library for rules of use; OA articles are governed by the applicable Creative Commons License

looking at a single, unmodified coil of the spring, it was not counted as an analogy if it consisted simply of thinking about a *part* of the original system (without changing the shape or other characteristics of the parts). Second, the indication of a mere surface similarity, such as one subject's comment that the drawing of springs in the original problem "reminded him of eels," was not counted as an analogy. Third, certain extreme cases, such as considering a very narrow or very wide spring, were not counted as analogies, because width is considered to be a problem variable, not a fixed feature. Fourth, the use of the term "analogy" was confined to a related case B at approximately the same level of abstraction as A. This criterion rules out saying that a robin is analogous to a bird, or that a spring is analogous to the general notion of a harmonic oscillator. Thus, when one subject thought about the behavior of a door spring as a particular example of a helical spring, this was not counted as an analogy. Further comments on the definition of spontaneous analogy appear in the discussion section.

Results

Observed Spontaneous Analogies. The solutions took from 6.4 up to 52 minutes, and the average length of a solution was 23.7 minutes. All subjects favored the (correct) answer that the wide spring would stretch farther. But the subjects varied considerably in the types of explanations they gave for their prediction. The subjects generated a large variety of analogous cases. Instances of spontaneous analogies were coded from the transcripts and videotapes using the definition given above. The results were as follows:

Number of subjects	10
Total number of sontaneous analogies generated	38
Total number of significant analogies generated	31
Number of subjects generating at least one analogy	8
Number of subjects generating a significant analogy	7

The subjects generated a total of 38 analogies. An analogy was classified as *significant* if it appeared to be part of a serious attempt to generate or evaluate a solution, and as *nonsignificant* if it was simply mentioned as an aside or commentary. For example, one subject was reminded of another problem he had seen involving the deflection of piano strings of different lengths, but apparently mentioned this as an aside without the intention of applying findings back to the spring problem. Since the primary focus here is on processes involved in attempts to use analogies, the significance of an analogy did not depend on whether the solution generated was correct. Thirty-one of the analogies were significant according to this criterion, and a number of these are illustrated in Figures 2, 3, and 4. Additional examples of significant analogies will be discussed in the section on analogy generation methods below. The 31 significant analogies include 3 generated by one subject, a Nobel laureate in physics, who solved the qualitative problem almost imme-

15516709, 1988, 4, Downloaded from https://onlinelibrary.wiley.com/doi/10.1207/s15516709cog1204_3, Wiley Online Library on [27/02/2023]. See the Terms and Conditions (https://onlinelibrary.wiley.com/terms-and-conditions) on Wiley Online Library for rules of use; OA articles are governed by the applicable Creative Commons License

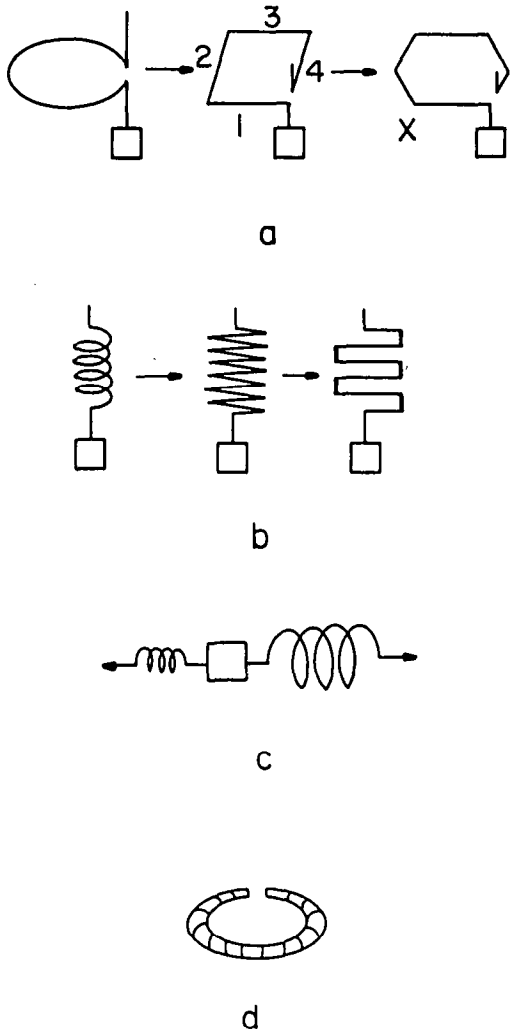

Figure 4. Novel Analogous Cases Constructed by Subjects. a. Circular, square, and hexagonal coils (leading to torsion insight). b. Two dimensional zigzag spring and modified zigzag with stiff joints. c. Pitting the wide spring against the narrow spring. d. Torsionless coil with frictionless bearings between elements.

diately, but spontaneously went on to generate analogies while successfully determining the exponent in the relationship between coil diameter and stretch. (The stretch actually increases with the *cube* of the diameter.) Thus analogies were involved in more advanced solutions as well as less advanced ones. Eight of the 10 subjects generated at least one analogy, and 7 of the 10 generated at least one significant analogy. The most common species of

15516709, 1988, 4, Downloaded from https://onlinelibrary.wiley.com/doi/10.1207/s15516709cog1204_3, Wiley Online Library on [27/02/2023]. See the Terms and Conditions (https://onlinelibrary.wiley.com/terms-and-conditions) on Wiley Online Library for rules of use; OA articles are governed by the applicable Creative Commons License

analogy was the bending rod and variations thereof, such as a bending saw blade, a bending wire, and a diving board. Six of the subjects generated an analogy of this type.

Major Processes Involved in Using an Analogy

Two further observations from the protocols are as follows: (1) Subjects indicated varying degrees of certainty about the appropriateness of each analogy. Sometimes they would decide that the new case was not really analogous to the original problem. In other instances further work would lead them to confirm (establish high confidence in) a relationshp of equivalence between A and B (with respect to the characteristics of interest in the problem). (2) On the other hand, subjects also indicated varying degrees of confidence in their understanding of the analogous case B itself. This suggests an important distinction between confidence in the *validity of the analogy relation* (e.g., confidence that the horizontal rod behaves like the spring), and confidence in their *understanding of the analogous case* (e.g., confidence that the long rod bends more than the short rod). These observations suggest that the following processes are involved in making a confident inference from a spontaneous analogy (Clement, 1982):

1. *Generating the analogy.* A conception of a situation B that is potentially analogous to the original problem A is accessed in memory or constructed. A tentative analogy relation is set up between A and B.
2. *Establishing confidence in the analogy relation.* The validity of the analogy relation between A and B is examined critically and is confirmed at a high level of confidence.
3. *Understanding the analogous case.* The subject examines and, if necessary, develops his or her understanding of the analogous case B, and the behavior of B becomes well understood, or at least predictable.
4. *Applying findings.* The subject applies conclusions or methods gained from B back to A.

This is consistent with the further observation that most solutions by analogy are not "instant solutions." Analogies are often generated tentatively, and processes (2) and (3) especially can be quite time consuming. Observations also indicate that the order in which the last three processes occur can vary, that subjects often move back and forth between them several times while gradually completing each process, and that failure to complete a process can be followed by an attempt to modify and improve, or replace, the analogous case B.

In the transcript excerpt above containing S1's hairpin analogy, there is evidence that he has completed processes (1) and (4). He also indicates that he has a firm understanding of the hairpin (process 3). However, he apparently has only moderate confidence in the idea that the spring behaves like the hairpin (process 2), and so his confidence in his answer is considerably

15516709, 1988, 4, Downloaded from https://onlinelibrary.wiley.com/doi/10.1207/s15516709cog1204_3, Wiley Online Library on [27/02/2023]. See the Terms and Conditions (https://onlinelibrary.wiley.com/terms-and-conditions) on Wiley Online Library for rules of use; OA articles are governed by the applicable Creative Commons License

less than 100% at this point. Thus, we refer to a tentative or unconfirmed analogy *relation* at this point.

As a second example of an unconfirmed analogy relation, another subject, S3, considered an analogy to the related problem of comparing short and long horizontal wires bent under the same weight.

010 S: (Draws horizontal wire in Figure 2b) And my intuition about that is that if you took the same wire that was fastened on the left here [short horizontal wire] and doubled the length and hung some weight on it, that the same material would bend considerably further....

019 S: It would seem that that means that um, that back in the original problem, the spring in picture 2 [the wider spring] is going to hang farther; it's going to be stretched more....

021 S: And I have a confidence of about 75%....

022 S: I have a great deal of confidence that Da [the displacement of the long wire] is greater than Db [the displacement of the short wire] in any case. I would say 100% confidence....

In this excerpt we find evidence that the subject has completed process (1) in line 10, process (4) in line 19, and process (3) in line 22. The fact that the subject indicates a confidence level of 100% for his ability to predict the behavior of the analogous case (process (3) but only a 75% confidence level for the entire problem, can be explained by assuming that he has not completed process (2). That is, he has not attained high confidence in a valid analogy relation between the case of the bending wires and the case of the two springs.

In other instances process (3), comprehending the analogous case, can remain uncompleted. An example where the subject constructs an extreme case from the analogous case in order to complete process (3) is provided by S2's double-length spring analogy discussed later in the section on analogy generation methods.

In the present analysis I make no strong commitment to a specific type of underlying representation, choosing instead to describe high-level processes operating on "conceptions" and "schemas" which are at the level for which data are available in the protocols. Transcripts such as those above indicated that processes (1) through (4) above can indeed take place separately. This paper focuses on process (1), the process of analogy generation. Three subprocesses for completing process (2), establishing confidence in the analogy relation, are discussed in Clement (1986). These are matching of key relationships, constructing bridging analogies, and finding a conserving transformation. Several methods for process (3), understanding the analogous case, are outlined in Clement (1981), including the use of factual knowledge, physical intuition, analysis in terms of a theory, or (recursively) another analogous case C. Two basic routes for completing process (4), applying findings, will be discussed in the final section of this paper: direct transfer

15516709, 1988, 4, Downloaded from https://onlinelibrary.wiley.com/doi/10.1207/s15516709cog1204_3, Wiley Online Library on [27/02/2023]. See the Terms and Conditions (https://onlinelibrary.wiley.com/terms-and-conditions) on Wiley Online Library for rules of use; OA articles are governed by the applicable Creative Commons License

of a predicted answer, partial model, or method of attack; and the provocative activation of a useful additional knowledge schema.

Analogy Generation Methods

Definition of Concepts. Analysis of the transcripts indicated that there were at least three types of analogy generation methods used by the subjects: generation via an equation or formal principle, generation via a transformation, and generation via an association. Examples of each type are discussed below. "Generation method" here refers to the way in which the analogous case B first comes to the attention of the subject during the solution.

1. Generation from a Formal Principle. A plausible hypothesis to explain how analogies are generated in science derives from the situation where a single equation or formal abstract principle (such as conservation of energy) applies to two or more different contexts. This suggests that analogies may be formed by first recognizing that the original problem situation, A, is an example of an established equation or principle, P, as shown in Figure 5a. The analogous situation, B, is then retrieved or generated as a second example of principle P. For example, after S1 referred to the fact that bending is proportional to the cube of the length in the engineer's model of a cantilever beam, he immediately thought about a person standing on the end of a diving board (an example of this principle). If this is the main method used by subjects, it will support the hypothesis that analogy generation can be reduced to the processes of assimilation by a formal principle, followed by accessing an example of the principle.

2. Generation via a Transformation. This occurs when a subject creates an analogous situation B by *modifying* the original situation A and thereby changing one or more features that were previously assumed to be fixed. In these instances there is no mention of a formal principle or equation. Consider the following example from subject S9:

041 S: I'm going to unroll these things [the two springs] and see if that helps my intuition any. Um, if I essentially, uh, uncoil or project the spring into a wire. . . the wire will actually go from here to here (draws horizontal line.) That's if I actually unroll the wire.

The subject proceeds to consider the effects of hanging weights on the ends of long and short horizontal wires. Unrolling the spring into a straight wire is an example of a transformation. It is reasonable to assume that such a transformation occurs when the subject focuses on an internal representation of the problem situation A and modifies one or more aspects of it to change it into a representation of situation B, as shown in Figure 5b. If the

15516709, 1988, 4, Downloaded from https://onlinelibrary.wiley.com/doi/10.1207/s15516709cog1204_3, Wiley Online Library on [27/02/2023]. See the Terms and Conditions (https://onlinelibrary.wiley.com/terms-and-conditions) on Wiley Online Library for rules of use; OA articles are governed by the applicable Creative Commons License

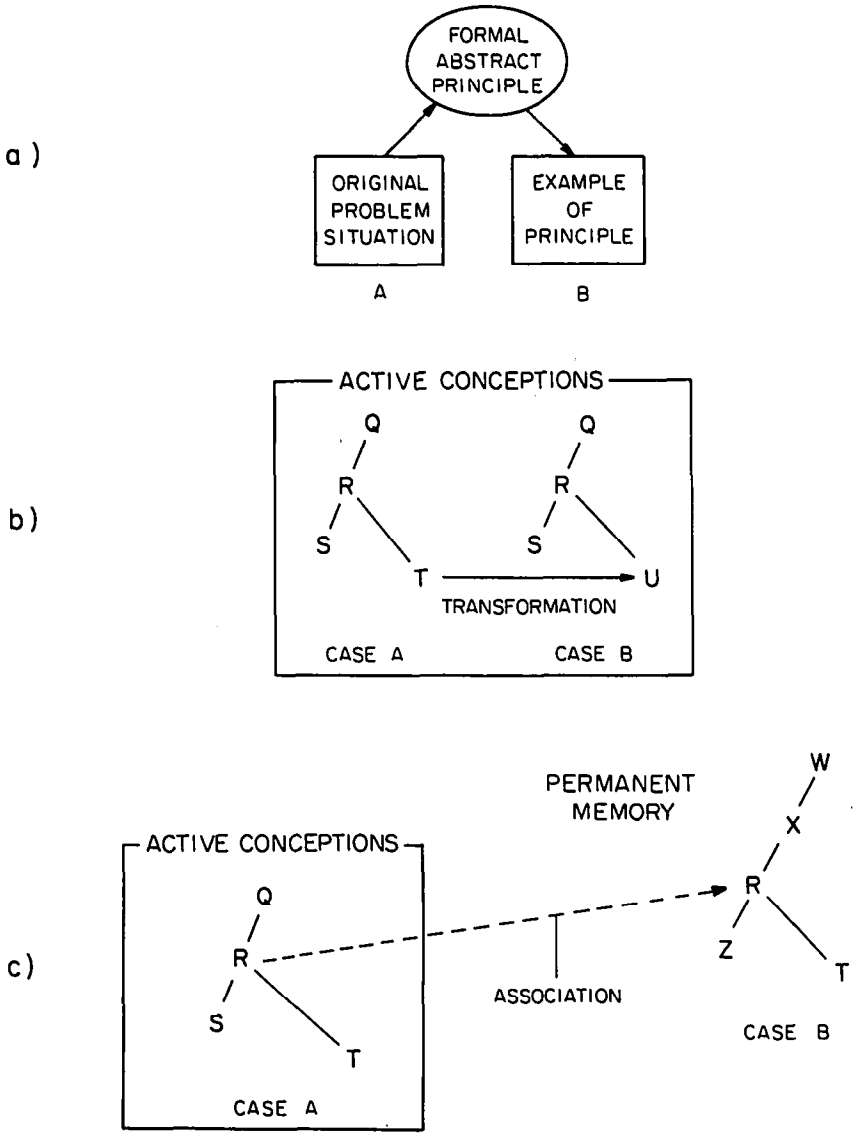

Figure 5. Analogy Generation Processes. a. *Generation via a formal principle:* A activates abstract principle P and analogous case B is retrieved or generated as a second example of P. b. *Generation via a transformation:* transformation modifies aspect of original problem representation; most elements are the same in A and B. c. *Generation via an association:* schema is activated associatively in permanent memory; most elements are different in A and B.

15516709, 1988, 4, Downloaded from https://onlinelibrary.wiley.com/doi/10.1207/s15516709cog1204_3, Wiley Online Library on [27/02/2023]. See the Terms and Conditions (https://onlinelibrary.wiley.com/terms-and-conditions) on Wiley Online Library for rules of use; OA articles are governed by the applicable Creative Commons License

changed elements are not causally important to the behavior in question, such a transformation should produce an analogous case.

Another somewhat more complicated example of a transformation occurred in the following case where an initial analogy triggered an idea for a second analogy. The subject S2 first generated the analogous problem of a bending rod. He then generated a second analogy in the form of a double-length (as opposed to double-width) spring (Figure 2e). He appears to generate this second analogy via a transformation while thinking about sliding a weight out along the bending rod, and then about sliding it down along the spring wire:

037 S: (Looking at a picture he has drawn of a bending rod) This rod here, as the weight moves along, it bends more.... Hmmm, what if I imagined moving the weight along the spring, as I'm moving it along this [rod]...would that tell me anything? I don't know. What if the spring were twice as long? Now, that's intersting, I-I just had this recognition of an equivalence.....

039 S: What if I recoiled the spring and made the spring twice as long instead of twice as wide...uhhh it seems to me pretty clear that the spring that's twice as long is going to stretch more....Now that's a-again, a kinesthetic intuition...but now I'm thinking...what happens...I'm...using a method of limits. I'm imagining that one applies a force closer and closer to the origin (top) of the spring and...as you get closer to the origin of the spring it hardly stretches at all...therefore, the further away you are along the spring, the more it stretches....So, a spring that's twice as long, I'm now quite sure, stretches more....Now if this is the same as a spring that's twice as wide, then that should stretch more....Uhhh, but *is* it the same as a spring that's twice as wide?

This attempt to use the analogous problem of the double-length spring shown in Figure 2e is of special interest because there is evidence of it having been generated via an imagined, continuous transformation—that of imagining sliding the weight down along the helical spring wire. The inverse of this transformation also appears to be used to generate the extreme case of a very short spring. This extreme case appears to confirm his intuition and gives him a firm prediction of a result for the new analogous case, but he is uncertain of whether the analogy relation is valid. This segment provides some evidence for analogy generation via a transformation involving dynamic imagery.[1]

The transformations cited so far involve a single continuous action but other examples can involve discrete acts of modification. S2 uses a discrete

[1] The generation process here is also distinguished by its playful nature. The subject appears to be exploring alternative cases related to the problem rather than progressing systematically toward a result. This type of exploratory behavior may play a role in highly creative solutions to problems in scientific research.

15516709, 1988, 4, Downloaded from https://onlinelibrary.wiley.com/doi/10.1207/s15516709cog1204_3, Wiley Online Library on [27/02/2023]. See the Terms and Conditions (https://onlinelibrary.wiley.com/terms-and-conditions) on Wiley Online Library for rules of use; OA articles are governed by the applicable Creative Commons License

transformation to generate the idea of a square spring early on in his solution, while debating about whether a horizontal bending rod (which has a changing slope) works in the same way as the stretched spring (which has a constant slope).

023 S: I still don't see why coiling the spring [from a horizontal rod] should make any difference.... Why does it have to be a [circular] coil? Surely you could coil a spring in squares, let's say, and it...would still behave more or less the same.

Later, he returns to this issue after drawing the circular coil in Figure 4a, and the idea of a polygonal coil leads him to a major breakthrough.

111 S: Darn it, darn it, darn it.... What could the circularity [in contrast to the straight rod] do? Why should it matter? How would it change the way the force is transmitted from increment to increment of the spring? Aha. Now let me think about—aha. Now this is interesting. I imagined...I recalled my idea of the square spring and the square is sort of like a circle and I wonder...what if I start with a rod and bend it once (places hands at each end of rod in drawing and motions as if trying to bend a rod) and then I bend it again. What if I produce a series of successive approximations to the circle by producing a series of polygons?.... Clearly there can't be a hell of a lot of difference between the circle and say, a hexagon.... (Draws hexagonal coil in Figure 4a) Now that's interesting. Just looking at this [hexagon] it occurs to me that when force is applied here, you not only get a bend on this segment, but because there's a pivot here (points to *X* in Figure 4a), you get a *torsion* effect.... Aha! Maybe the behavior of the spring has something to do with *twist* forces (moves hands as if twisting an object) as well as *bend* forces (moves hands as if bending an object). That's a real interesting idea.... That might be the key difference between this [bending rod] which involves no torsion forces, and this [hexagon]. Let me accentuate the torsion force by making a square where there's a right angle (draws square coil). I like that. A right angle...that unmixes the bend from the torsion...Now...I have two forces introducing a stretch. I have the force that bends this...segment [1 in Figure 4a], and in addition I have a torsion force which twists [segment 2] (makes motion like turning a door knob with one hand).

In the above section, the subject appeared to use a transformation to generate the analogy of a square coil (transforming a horizontal rod by bending it into square coils) and later generated a hexagonal coil. These led him to make an important conceptual breakthrough in the problem. He has discovered a new causal variable—torsion—in the system by using an analogy. The torsion effect can be seen in the square coil in Figure 4a by viewing rod 1 as a wrench which puts a twist in rod 2 when the end of rod 1 is pulled downward. Similarly, rod 2 twists rod 3, and so on.

15516709, 1988, 4, Downloaded from https://onlinelibrary.wiley.com/doi/10.1207/s15516709cog1204_3, Wiley Online Library on [27/02/2023]. See the Terms and Conditions (https://onlinelibrary.wiley.com/terms-and-conditions) on Wiley Online Library for rules of use; OA articles are governed by the applicable Creative Commons License

3. Generation via an Association. In contrast to generating an analogy via a transformation, the subject generating an analogy via an association is "reminded" of an analogous case B in memory, rather than transforming A into B. Such an analogous case may differ in many ways from the original problem but still have important features in common with the original situation. For example, S2 produced evidence for several analogies generated via an association in his protocol when he said: "I feel as though I'm reasoning in circles and I think I'll make a deliberate effort to break out of the circle somehow.... What else stretches?.... Like rubber bands, molecules, polyesters." Intuitively, it is as if the subject were "letting his mind wander" here in a divergent process that allows him to retrieve similar situations. However, the focus on the concept *stretching* here appears to play a role in constraining and guiding the activation process. In another example, subject S6 compared the wide and narrow springs with two blocks of foam rubber, one made with large air bubbles and one made with small bubbles in the foam, respectively (Figure 2f). He had a strong intuition that the foam with large air bubbles would be easier to compress. Another subject, S5, examined the relationships between coil width, coiling angle, and wire length by thinking about mountain roads winding up narrow and wide mountains (Figure 3f).

As shown in Figure 5, the fact that these analogous cases differ in many ways from the problem situation suggests that an established schema B is being activated associatively in premanent memory, as opposed to being constructed via a transformation of A in temporary memory. A stretched rubber band, for example, does not appear to be a construction created by modifying the original spring situation; rather, it appears to be a familiar idea that has been activated as a whole. Thus associative analogies would tend to be more "distant" from the original situation conceptually than those produced by transformations in the sense that they share fewer features with A.[2] Figure 5c is undoubtedly oversimplified, since it portrays an association as a single connection, whereas in some cases a much more complicated process of activation from multiple sources may be involved. Similarly, Figure 5b gives the impression that a transformation is always a simple, discrete replacement, whereas in the case of spatial transformations of entire shapes, (such as "unbending") the process may be a much more distributed and continuous one; given the existing data, it seems premature to make the

[2] Two of the four processes involved in using an analogy mentioned earlier were: (1) access or create an analogous case and generate a tentative analogy relation between it and the original problem; and (3) understand the analogous case B. In stating that generation via a transformation takes place in temporary memory rather than accessing permanent memory, I am referring to step (1) above, not step (3). One way (3) can be achieved is by accessing other familiar schemas in permanent memory which can interpret or analyze B.

15516709, 1988, 4, Downloaded from https://onlinelibrary.wiley.com/doi/10.1207/s15516709cog1204_3, Wiley Online Library on [27/02/2023]. See the Terms and Conditions (https://onlinelibrary.wiley.com/terms-and-conditions) on Wiley Online Library for rules of use; OA articles are governed by the applicable Creative Commons License

assumption that discrete feature mapping is necessarily the only method for implementing analogical reasoning processes.

Analogy Generation Methods

Observation Criteria and Results. The 31 significant analogies in the 10 solutions to the spring problem were classified according to their method of generation. Observation criteria used to provide evidence that a certain generation method was used are given below, along with the number of analogies in that category.

Generation via a Formal Principle. Number of Significant Analogies . . 1
Observable characteristics used as indicators of an analogy generated via a principle were: (1) The subject refers to an abstract formal principle (mathematical or verbal) near the first reference to the analogous case B; or (2) The subject may refer to case B as an "example" of a principle.

Generation via a Transformation.[3] Number of Significant Analogies . . 18
Observable characteristics, in order of importance, were: (1) The subject refers to modifying an aspect of situation A to create situation B; (2) The subject states that B is an invented situation he has not encountered before; (3) The novelty of the analogous case suggests that it has just been invented; or (4) There exist a small number of transformations which can change A into B since the analogous case is not different in many ways from the original problem.

Generation via an Association. Number of Significant Analogies 8
Observable characteristics, in order of importance, were: (1) The subject mentions "being reminded of" or "remembering" case B; (2) B is different in many ways from the original problem; (3) The subject refers to B as a "familiar" situation; (4) B is a situation which obviously should be familiar to S (but may not necessarily be well understood by S).

Method Unclear. Number of Significant Analogies 4
An analogous case was placed in the category "method unclear" when there

[3] At one point consideration was given to splitting the *generated via a transformation* category into two parts: those cases generated by a simple modification or transformation of the original problem A; and those *constructed* by combining and assembling several schemas into one mechanism. It might prove theoretically useful to distinguish the latter process, but this proved difficult at an observational level for this data base since all of the cases in question resembled the spring in some way. Therefore only the single category (which might be more aptly labeled "transformation or construction") was used.

15516709, 1988, 4, Downloaded from https://onlinelibrary.wiley.com/doi/10.1207/s15516709cog1204_3, Wiley Online Library on [27/02/2023]. See the Terms and Conditions (https://onlinelibrary.wiley.com/terms-and-conditions) on Wiley Online Library for rules of use; OA articles are governed by the applicable Creative Commons License

was not enough data in the protocol to make a confident classification of the generation method.

Note that the largest number of significant analogies were generated via a transformation and that evidence was observed for generation via a principle in only one case.

Novel Cases

There were four analogous cases observed that were clearly novel, shown in Figure 4. (Novelty is not a fourth type of analogy generation method but rather a descriptive characteristic. Each of these four cases was classified as having been generated via a transformation.) They include springs with polygonal coils, two-dimensional zigzag springs, and an experiment where the subject pits the narrow spring against the wide spring by attaching them to opposite sides of the weight. A fourth example of a novel case is the torsionless spring coil (Figure 4d) made with many freely twisting ball bearing joints between segments and used to test (mentally) whether a spring coil could work without torsion. (It could not, because such a coil would collapse under its own weight into an almost straight vertical wire.) The significance of these cases is that they appear to have been invented rather than drawn directly from the subjects' prior experience. They are Gedanken (thought) experiments in the sense of being invented situations where the subject attempts to predict the behavior of a new system without making new empirical observations.

Summary of Observations with Respect to Analogy Generation

In summary, spontaneously generated analogies were observed to play a significant role in the problem solutions of scientifically trained subjects. Generation via a transformation and via an association were the two primary analogy generation methods for which evidence was observed. Evidence for analogies generated via a formal principle occurred only rarely. This result certainly does not rule out the possibility that the latter method may be used in scientific problem solving, but it does indicate that it may not be the most common method for generating analogies, and that the other two methods may play a significant role. In addition, several novel analogous cases were generated that can be described as invented Gedanken experiments.

DISCUSSION

The Presence of Analogies in the Solutions

Analogy Generation as a "Horizontal" Change in Representation. From the point of view of problem-solving theory, an analogy can be said to involve a shift in the subject's problem representation. However, it is a shift

15516709, 1988, 4, Downloaded from https://onlinelibrary.wiley.com/doi/10.1207/s15516709cog1204_3, Wiley Online Library on [27/02/2023]. See the Terms and Conditions (https://onlinelibrary.wiley.com/terms-and-conditions) on Wiley Online Library for rules of use; OA articles are governed by the applicable Creative Commons License

of a special kind. Other instances of shifts in problem representation can occur when the subject engages in abstract planning or in using symbolic representations, such as equations. However, in the latter two instances the subject moves "vertically" to a more abstract representation whereas in moving to an analogous case, the subject moves "horizontally" to another problem representation at roughly the same level of abstraction. Using an analogy is the most creative of these three strategies in the sense that one is shifting one's attention to a different problem, not just to an abstract version of the same problem. One way, then, to view analogy generation is as a metaoperator which operates on the initial problem representation rather than within it.

Developing Useful Boundaries for the Concept of "Spontaneous Analogy." This idea of a horizontal change in representation leads to another motive for the definition of spontaneous analogy presented earlier. The definition is consistent with the idea that analogy generation is a creative and divergent process. The condition that the analogous case be one where "features ordinarily assumed fixed in the original situation are different" means that the subject must somehow break away from the original problem and shift his or her attention to a significantly different problem. This may be difficult for some people to do, probably because of the difficulty involved in breaking set—breaking out of the assumptions built up in considering the original problem.

To some, analogies such as a bending rod or a hexagonal coil (Figure 4a) may seem too similar to the original spring to be counted as "real" analogies. The important issues here are: "What is the form of the basic reasoning patterns being used?" and, "What are the most useful and fundamental distinctions to emphasize in constructing definitions for terms like 'analogy'?" Certainly much data have been collected on problem solving where no spontaneous analogies occur. What seems to distinguish spontaneous analogies when they happen, more than anything else, is the fact that the subject is somehow bold enough to break away from the previous assumptions about the problem context. Just because an analogous case appears to be "close" to the original problem from hindsight does not mean that the assumption-breaking act of generating it was easy, by any means. For example, the hexagonal coil case cited earlier in the section on analogy generation via a transformation is quite close in shape to the circular coil case, and yet it is a powerful idea that led to a genuine scientific insight. It was generated by only 1 of the 10 subjects and was used by this subject to discover the major contribution of a twisting effect to the stretch of the spring. Twisting is in fact the predominant source of stretching in a helical spring. Its identification in the hexagonal and square coils constitutes a scientific insight involving *the discovery of a new variable* and *the discovery of a new causal relation* in

15516709, 1988, 4, Downloaded from https://onlinelibrary.wiley.com/doi/10.1207/s15516709cog1204_3, Wiley Online Library on [27/02/2023]. See the Terms and Conditions (https://onlinelibrary.wiley.com/terms-and-conditions) on Wiley Online Library for rules of use; OA articles are governed by the applicable Creative Commons License

the system.[4] The use of such chains of several analogies appears to be part of a cycle of conjecture, criticism, and modification that produces successively more powerful mental models.

Thus the action of "considering a situation B which violates one or more fixed features of A" is taken as central to the definition of a spontaneous analogy. I consider this a more important criterion than requiring case B to have *many* surface features that are different from A's, and so cases like the hexagonal coil are included as examples of analogies. Such "close" analogies appear to be one of the most fruitful and powerful types of analogies observed. The definition of analogy is still fairly restrictive, however, since it excludes other extreme cases, specific examples of the problem context, and focusing on unmodified parts of the problem.

What Makes an Analogy Useful? An interesting characteristic of analogical reasoning lies in the paradox that by seeming to move *away* from a problem the subject can actually come *closer* to a solution. In order to use an analogy effectively one must be able to postpone working directly on the original problem and be willing to take an "investigatory side-trip" with the faith that it may pay off in the end. This is a risky thing to do (especially while being recorded); there is no guarantee the side-trip will make any contribution to the solution at all.

The resolution of the "moving closer by moving away" paradox would seem to lie in the idea that humans appear to be constrained to build up new knowledge by starting from old knowledge. In the words of Ernest Nagel (1961), scientists use established analogies in the form of models in science (such as a "billiard ball" model for gases) in order to "make the unfamiliar familiar." This is one of the legitimate functions of scientific models, in Nagel's view. Nagel is referring to established analogue models in science, whereas in the present study the analogous cases are usually based on familiar ideas from personal experience. But the function Nagel describes for analogies in science could be taken as equivalent to the function of the analogies in this study in the following sense. Moving closer to the answer by moving away from the problem via an analogy can work because one is moving to a more familiar area one knows more about, and one may then be able to transfer part of this knowledge back to the original problem. Such knowl-

[4] The solution containing this insight event is analyzed in more detail in Clement (in press). One can see that stretching the coil straight would put one full twist into the wire by thinking of a single circular coil made of a flat ribbon (as can be cut out of a sheet of paper). The idea that the spring wire bends is also partly correct. By imagining the extreme case of a singular circular coil of a spring stretched out into an almost straight wire, one can see that stretching produces some unbending as it removes the circular curvature originally put into the wire when it was coiled. Twisting in the square coil can also be used to predict that the stretch varies with the *cube* of the coil diameter.

15516709, 1988, 4, Downloaded from https://onlinelibrary.wiley.com/doi/10.1207/s15516709cog1204_3, Wiley Online Library on [27/02/2023]. See the Terms and Conditions (https://onlinelibrary.wiley.com/terms-and-conditions) on Wiley Online Library for rules of use; OA articles are governed by the applicable Creative Commons License

edge could contribute in three possible ways: It may predict a full answer; it may provide a model for understanding part of A; or it may simply provide a suggested method of attack.

However, in addition to this "direct trasnsfer" function, there appears to be another possible reason for the usefulness of an analogy. A clue comes from novel analogous cases, such as those shown in Figure 4; the fact that they are novel argues that they are *less* familiar to the subject than the original helical spring. If they are useful it will not be because they are more familiar, but because they are more analyzable or more provocative. "Provocative" here means that once the analogous case has come to the attention of the subject, it may in turn help to activate other previously unaccessed but useful knowledge schemas in memory. This is apparently what happened when subject S2 made the discovery of a torsion effect in the hexagonal coil analogy. In such instances the knowledge that one gains from the analogous case B need not be stored "in" B. Thinking about B (or about A and B) may activate a useful schema (such as torsion) which has not previously been applied either to A or to B.

This instance provides an empirical exemplar for Black's view that a metaphor can produce knowledge in the form of an insight that was not residing beforehand in either the original or the analogous cases: "It would be more illuminating in some of these cases to say that the metaphor creates the similarity than to say that it formulates some similarity antecedently existing" (Black, 1979, p. 37). Leaving aside philosophical questions of ontology here, this statement would appear to be true at least with respect to the formation of new cognitive similarity relations between A and B in the subject. In contrast to the usual view of analogy generation, in this case the recognition of the key similarity (torsion) occurs *after* the generation of the analogy between the spring and the hexagonal coil.

In summary, two reasons for the usefulness of an analogy to B are: (1) A "direct transfer" function where B provides some established knowledge of behavior or mechanism or method that can be transferred to the original problem A; and (2) An indirect, "provocative" function where thinking about the (possibly novel) analogous case B may in turn activate other schemas in memory which are useful for understanding both A and B in a new way. In each of these roles, however, the analogy helps to access knowledge which was not previously recognized as relevant to the problem. Thus the ultimate goal in using an analogy is ordinarily to connect to something more familiar, but the analogous case itself is not always more familiar when it plays the role of a stepping stone in activating a familiar schema.

In some cases an analogy also may become developed and refined enough to become a new scientific model for understanding a system. This important function is discussed in Campbell (1957), Hesse (1966), Darden (1983), and Clement (in press).

15516709, 1988, 4, Downloaded from https://onlinelibrary.wiley.com/doi/10.1207/s15516709cog1204_3, Wiley Online Library on [27/02/2023]. See the Terms and Conditions (https://onlinelibrary.wiley.com/terms-and-conditions) on Wiley Online Library for rules of use; OA articles are governed by the applicable Creative Commons License

Generation Methods and Invention

Three Generation Methods. In examining the sections of transcript where analogies were first mentioned by the subjects, no single method for analogy generation was found. Rather, evidence was found for three different generation methods: generation via a formal principle, via an association, and via a transformation. Of these, association is the most direct since it simply involves the activation of an existing schema. On the other hand, in generation via a principle, thinking of the principle serves as an intermediate step on the way to producing the analogous case. If this had been the only method used, it would argue that the analogy generation process reduces to the process of assimilation by an abstract principle followed by accessing an example of the principle. Of the three generation methods, it is also the most formal. However, generation via a principle was observed in only one case. The fact that less formal methods were observed in all but one case provides further support for the idea that experts can use nonformal as well as formal methods in solving problems.

The protocols indicated that more analogies were generated via a transformation than via an association. Although an association process is usually cited as the first step in using an analogy and as an important source of creativity in scientific problem solving, it may be that transformation processes are just as important, if not more important in scientific work.

Invented Analogies. The method of generation via a transformation is of interest because of its potential for creating new cases. When we ask the general question of what it means to think of an analogous case, the standard view is that the analogous case is a familiar knowledge structure residing in memory which is at some point activated or retrieved as being related to the current problem. However, in using this kind of model, it is difficult to account for the production of the four novel cases shown in Figure 4. The occurrence of these novel cases supports the hypothesis that some analogous cases are actually invented, not retrieved or reconstructed from memory. That is, in addition to creating a new analogy relation between cases A and B, (which is assumed to occur in all of the spontaneous analogies discussed in this paper) the subject also creates the analogous case B itself.

Inventing a novel analogous case is something like inventing a new machine or composing a piece of music in that some very major aspects of the case have never been experienced by the subject before. As in composition, although individual elements used in the invention of a novel analogous case originate in permanent memory, it makes little sense to say that the case as a whole was retrieved from memory, since the case has never been in mind before. This means that an analogy relation is not always simply "recognized" between the original case and an existing analogous case. Apparently

15516709, 1988, 4, Downloaded from https://onlinelibrary.wiley.com/doi/10.1207/s15516709cog1204_3, Wiley Online Library on [27/02/2023]. See the Terms and Conditions (https://onlinelibrary.wiley.com/terms-and-conditions) on Wiley Online Library for rules of use; OA articles are governed by the applicable Creative Commons License

the analogous case can sometimes be created along with the analogy relation. The presence of such a process would seem to be necessary in order to explain the emergence of novel analogue models in science.

CONCLUSION

Evidence has been presented indicating that scientifically trained individuals can generate analogies spontaneously during problem solving. Such methods are not often observed in expert solutions to standard lower-level textbook problems where more straightforward and familiar techniques can be used. But when given a problem like the spring problem, where most subjects have no pre-established, ready-made procedures to apply, creative processes like analogy generation do come into play, and a wide variety of "species" of problem representations evolve. In some cases an analogy can lead to the discovery of new causal factors in the system and to the development of a new mental model for understanding the system, such as the square coil with torsion model.

An attempt was made to propose processes that are closely tied to protocol observations. Previous work on analogical reasoning has been largely based on philosophical grounds, proposals for sufficient information processing strategies, or empirical studies of provoked rather than spontaneous analogies. These have emphasized the ideas of generation via an association, access to a retrieved analogous case which itself does not require development, evaluation via matching, and application via direct transfer. The present study exposes a number of other important processes as well, including generation via transformations, generation of novel, invented analogous cases, efforts to improve or develop greater understanding of the analogous case B, and application via the provocative activation of a useful schema. (Alternative evaluation processes are described in Clement, 1983b, 1986.) These results underscore the need for naturalistic observations of human behavior in cognitive science.

With regard to educational implications, there is a growing literature which documents the fact that physics students tend to use an overly formula centered approach in solving problems (Clement, 1983a, Larkin, 1983). They often seem to skip the essential step of assembling a qualitative physical model of the situation described in the problem and begin formula manipulation prematurely. Teachers and students should know that scientists are not simply quantitative deduction engines working from formal axioms and mathematical principles. Studies such as the present one provide evidence that experts do use less formal, qualitative methods such as the use of analogies, extreme cases, and selected physical intuitions. Scholars such as Campbell (1957) and Hesse (1966) have argued that analogies can play an important role in the development of hypothesized models in science; this

15516709, 1988, 4, Downloaded from https://onlinelibrary.wiley.com/doi/10.1207/s15516709cog1204_3, Wiley Online Library on [27/02/2023]. See the Terms and Conditions (https://onlinelibrary.wiley.com/terms-and-conditions) on Wiley Online Library for rules of use; OA articles are governed by the applicable Creative Commons License

suggests that they might play a similar role in instruction. An instructional strategy designed to use analogies to overcome students' misconceptions in physics is described in Clement (1986); this strategy attempts to build analogies to anchoring examples which are already intuitively understood by students. Further work is needed to investigate the role that such reasoning processes can play in students' problem solving and learning processes.

Four processes were identified as important in making an inference by analogy: (1) generating the analogy; (2) establishing confidence in the validity of the analogy relation; (3) understanding the analogous case; and (4) application of findings from thinking about the analogous case back to the original case. The present paper has concentrated only on documenting the presence of spontaneous analogies in expert thinking and on the first process above, analogy generation. In addition there are many other creative reasoning patterns in the protocols of expert scientists that have not yet been adequately described, including the use of chains of analogies, symmetry arguments, particular forms of physical intuition, and extreme case arguments. Thus, there are a considerable number of interesting phenomena awaiting investigation in the area of creative scientific problem solving.

■ Original Submission Date: August, 22, 1984; Revised November 15, 1985.

REFERENCES

Black, M. (1979). More about metaphor. In A. Ortony (Ed.), *Metaphor and thought.* Cambridge, England: Cambridge University Press.

Brown, J.S., Collins, A., & Harris, G. (1978). Artificial intelligence and learning strategies. In H.F. O'Neil (Ed.), *Learning strategies.* New York: Academic.

Campbell, N.R. (1957). *Foundations of science.* New York: Dover.

Clement, J. (1981). Analogy generation in scientific problem solving. *Proceedings of the Third Annual Conference of the Cognitive Science Society, 3,* 137–140.

Clement, J. (1982). Analogical reasoning patterns in expert problem solving. *Proceedings of the Fourth Annual Conference of the Cognitive Science Society, 4,* 79–81.

Clement, J. (1983a). A conceptual model discussed by Galileo and used intuitively by physics students. In D. Gentner & A.L. Stevens (Eds.), *Mental models.* Hillsdale, NJ: Erlbaum.

Clement, J. (1983b). Use of analogies and spatial transformations by experts in solving mathematics problems. *Proceedings of the Fifth Annual Meeting of the International Group for the Psychology of Mathematics Education, North American Chapter, 5,* 101–111.

Clement, J. (1986). Methods for evaluating the validity of hypothesized analogies. *Proceedings of the Eighth Annual Conference of the Cognitive Science Society.* Hillsdale, NJ: Erlbaum.

Clement, J. (in press). Learning via model construction and criticism: Sources of creativity in science. In J. Glover, R. Ronning, & C. Reynolds (Eds.), *Handbook of creativity: Assessment, theory and research.* New York: Plenum.

Darden, L. (1983). Artificial intelligence and philosophy of science: Reasoning by analogy in theory construction. *Philosophy of Science Association, 2,* 147–165.

diSessa, A. (1983). Phenomenology and the evolution of intuition. In D. Gentner & A. Stevens (Eds.), *Mental models.* Hillsdale, NJ: Erlbaum.

15516709, 1988, 4, Downloaded from https://onlinelibrary.wiley.com/doi/10.1207/s15516709cog1204_3, Wiley Online Library on [27/02/2023]. See the Terms and Conditions (https://onlinelibrary.wiley.com/terms-and-conditions) on Wiley Online Library for rules of use; OA articles are governed by the applicable Creative Commons License

Dreistadt, R. (1968). An analysis of the use of analogies and metaphors in science. *Journal of Psychology, 68,* 97–116.

Gentner, D. (1982). Are scientific analogies metaphors? In D.S. Miall (Ed.), *Metaphor: Problems and perspectives.* Brighton, England: Harvester Press.

Gick, M., & Holyoak, K.J. (1980). Analogical problem solving. *Cognitive Psychology, 12,* 306–355.

Hesse, M. (1966). *Models and analogies in science.* Notre Dame, IN: University of Notre Dame Press.

Knorr, K. (1980). *The manufacture of knowledge.* Cambridge, England: Oxford University Press.

Krueger, T. (1981). *Imagery pattern in creative problem solving.* Las Cruces, NM: Encina Press.

Lakoff, G., & Johnson, M. (1980). *Metaphors we live by.* Chicago: University of Chicago Press.

Larkin, J. (1983). The role of problem representation in physics. In D. Gentner & A. Stevens (Eds.), *Mental models.* Hillsdale, NJ: Erlbaum.

Nagel, E. (1961). *The structure of science: Problems in the logic of scientific explanation.* New York: Harcourt, Brace, & World.

Polya, G. (1954). *Mathematics and plausible reasoning, Vol. 1: Induction and analogy in mathematics.* Princeton, NJ: Princeton University Press.

Rumelhart, D., & Norman, D. (1980). Analogical processes in learning. In J.R. Anderson (Ed.), *Cognitive skills and their acquisition.* Hillsdale, NJ: Erlbaum.

Schon, D. (1979). Generative metaphor: A perspective on problem setting in social policy. In A. Ortony (Ed.), *Metaphor and thought.* New York: Cambridge University Press.

Sternberg, R.J. (1977). *Intelligence, information processing, and analogical reasoning: The componential analysis of human abilities.* Hillsdale, NJ: Erlbaum.

VanLehn, K., & Brown, J.S. (1979). Planning nets: A representation for formalizing analogies and semantic models of procedural skills. In R.E. Snow, P.A. Frederico, & W.E. Montague (Eds., *Aptitude learning and instruction: Cognitive process analyses.* Hillsdale, NJ: Erlbaum.

Wertheimer, M. (1959). *Productive thinking.* New York: Harper & Row.

15516709, 1988, 4, Downloaded from https://onlinelibrary.wiley.com/doi/10.1207/s15516709cog1204_3, Wiley Online Library on [27/02/2023]. See the Terms and Conditions (https://onlinelibrary.wiley.com/terms-and-conditions) on Wiley Online Library for rules of use; OA articles are governed by the applicable Creative Commons License