IJARSCT
ISSN (Online) 2581-9429
International Journal of Advanced Research in Science, Communication and Technology (IJARSCT)
Volume 5, Issue 1, May 2021
Impact Factor: 4.819

Conversion of Sound Energy Into Electrical Energy

Mr. R. Srinivasan[1], M. Marudhanayaki[2], V. Vashnavi[3], S. Nathiya[4], R. Priya[5]
Faculty, Department of Electrical and Electronics Engineering[1]
Students, Department of Electrical and Electronics Engineering[2,3,4,5]
Vivekanandha College of Technology for Women, Tiruchengode, Namakkal

Abstract: *In this paper we discover a less popular but useful source of clean energy i.e. Noise (Sound Energy). Waste form of sound energy can be used for some creative purpose. Random unwanted noise can be treated as a source of electrical energy which can be converted by a transducer. The output of a transducer is enhanced by the use of signal conditioning device. The resultant electrical energy is stored in a battery such that it can be used for further applications. We need electricity on regular basis for running all our appliances and to carry out our daily work and as we all know there is huge scarcity of energy everywhere. It's really very difficult to imagine our life without electricity, our life would really stop so there is high need to produce electricity at faster rate and find other feasible method to produce electricity .Various approaches are used and commencement of these approaches help at a vast scale to provide or to fulfill the demand of the electricity. Now a day using alternate sources of energy such as sound energy. Peltier device is used for the conversion of sound energy into Electrical Energy. Based on studies on converting sound to electricity over the years, some effective implements of electric generation using sound are put forward for the new situation of utilizing of noise. As sound has enormous amount energy with it, it could be used by converting it into electric energy for various purposes. Sound energy is a mechanical energy so according to law of thermodynamics mechanical energy could be converted into electric energy. Sound energy could be converted by different methods; Method 1 by creating apparatus using curtain (diaphragm) magnet and conductor. Method 2 by converting Sound energy heat energy and then heat energy electric energy. In this aspect lot of research is to be done but on a positive note this could surely be done which could solve the energy problem of the entire world. In the near future, it will prove to be a great boon to the world, since it will be able to extract electrical energy from many sources such as waste sound and many types of different energies of renewable type. There are multiple sources of sound that go unnoticed. The use of transducers to convert sound into energy demonstrates that noise can act as an alternative source of energy. This technology is not practically usable up till now due to efficiency concerns but the present work on this field makes its future quiet promising.*

I. INTRODUCTION

The "law of conservation of energy" states that energy cannot be created nor be destroyed. Under the consideration of this law the technological giants have discovered numerous sources to extract energy from them and use it as a source of power for conventional use. There are various so called eco-friendly sources of energy that we have discovered till the present artificial era. Some of them are implemented to great extent under the suitable circumstances to overcome the short run of the energy due to technological boom that has led the energy needs to its apex. Solar energy is one in the list that came up with the wide range of applications such as solar heaters; solar cookers and it gained success due to its easy implementation. There are various other sources of renewable energy which includes harassing energy form wind, Biomass, water etc. But the efficiency of the energy sources discussed above is the major issue over which the scientists are working since long. The efficiency of the solar cell is 20% only under the practical conditions. This is not the only problem with present sources it further extends to high cost involved in production process. Thus the researchers now are feeling the need of other kinds of sources to harass energy for our conventional uses.

To add to the list there is an emerging scenario which leads us to a new renewable energy source known to us since long and that are the sound. The sound or noise in other terms is present all around us. So why not use it to satisfy our needs of energy. In our basic applications we see sound be converted in the electrical signals to travel over the media for communication purposes. For example the sound energy is converted into electrical signals using diaphragm present in the microphone and these signals then reach to the speakers and then converted back to sound. The electrical current generated by a microphone is very small and referred to as MIC-level; this signal is typically measured in mill volts. Before it can be used for anything serious the signal needs to be amplified, usually to line level (typically 0.5-2V). Application of sound energy as the source of electricity can be much beneficial for the human existence as compared to other sources. The concentration of sound(noise) to use it for power generation can lead to discovery of another hidden source of energy which can act as a boon to non-renewable sources such as coal, crude oil etc. Which are on line of extinction?

The Existing System of converting the sound to electricity is with the use of piezoelectric materials Lead zirconium titanate, Quartz, Barium titanate. Electricity can be generated directly from sound energy by piezoelectric effect. The way it works is that the mechanical energy of sound is applied directly to a crystal (or possibly a ceramic) with strong piezoelectric characteristics, and the crystal will generate a small amount of voltage in response to the application of that mechanical energy (sound). What we are doing is "squeezing" the crystal. A squeeze will generate a small voltage for the duration of the squeeze. When the crystal is released, another small voltage will be generated in the opposite polarity. But, lots of works is to be done in this field. Its efficiency is not that good so improvement is being required. It is bit costlier. As whole setup would be done. It could not be used in the where decibel of sound is very low. Efficiency is very less and cost of the existing system is high.

II. Objective Of The Project

The objective of our project is to generate electricity without pollution and to generate electricity using wasted energy. The production of electric power from the sound energy is the main theme of our project. The Sound energy is converted into Electrical energy with the help of thermal energy (Peltier).

III. Design And Methodology

In this proposed system sound energy is converted into electrical energy. In the System Converting Sound Energy into Electrical Energy with the use of Peltier Module. But Electrical Energy cannot be generated directly from Sound Energy, so here the Sound Energy is converted into Heat Energy and then heat Energy is converted into Electrical Energy by Peltier Effect. The Effect creates a temperature difference by transferring heat between two electrical junctions. When the current flows through the junctions of the two conductors, heat is removed at one junction and cooling occurs.

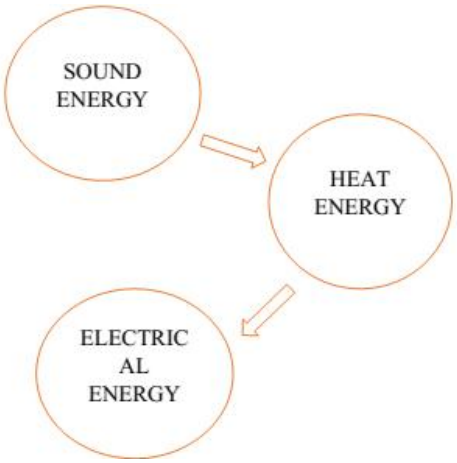

IJARSCT
ISSN (Online) 2581-9429
International Journal of Advanced Research in Science, Communication and Technology (IJARSCT)
Volume 5, Issue 1, May 2021
Impact Factor: 4.819

The Block diagram (Fig 3.2) of Power Generation System compares main components namely such as Sound energy, Boost converter, Battery, Inverter, Load. Whenever sound energy are generated around us, we can convert that energy into electrical energy. The Pressure energy is directly converted into electrical energy by piezoelectric sensor. Sound energy cannot be converted directly into electricity.

So sound energy is first converted into thermal (heat) energy and then converts thermal energy into electrical energy by Peltier. The Peltier works in the Peltier effect, the Peltier effect is when electricity is created between a thermocouple when the ends are subjected to a temperature difference between them. The Peltier effect occurs when a temperature difference is created between the junctions by applying a voltage difference across the terminals.

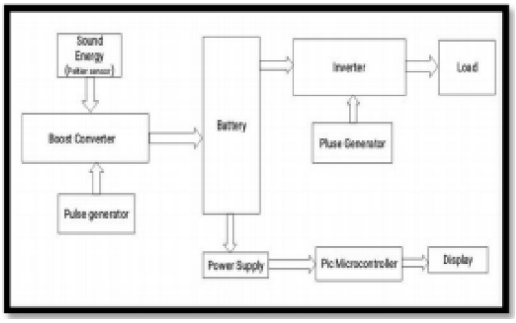

Sound energy is first given into the MIC, the mic is converts sound energy into electrical energy at very low voltage level that Voltage is given to the speaker through Amplifier. When we transferring energy or signal there is definitely some losses in there, the form of heat. That Thermal (heat) energy is converted into electrical energy by Peltier. That Energy is fed into Boost converter.

A boost converter is DC-DC power converters that step up voltage from its input to its output. It is a class of switched mode power supply containing at least two semiconductors and at least one energy storage element: a capacitor, inductor. Or the two in combination. The output of electricity from the sound energy is given as input to the boost converter. The boost converter amplifies the less power inputs into high power and supplies it to the battery. The input power supply is must need to run the boost converter. For that we use a pulse generator as input to the boost converter.

The output of the boost converter is given as a input to the battery and the power is stored in the battery, and the battery stores the energy in the form of Direct Current. Then we can use the power from the battery to suit our needs. If we want AC power, we can convert Direct Current into Alternative Current by using Inverter. That Inverter is also needs a Power Supply to run and for that purpose using a pulse generator. The Microcontroller is used to monitor the output of pressure energy and sound energy, the power of battery. Power is supplied from the battery to power that microcontroller. Then the pressure energy, sound energy and the monitoring results of the battery are given on display.

IV. Result Analysis

The project of "CONVERSION OF SOUND ENERGY INTO ELECTRICAL ENERGY" is successfully designed and tested. The voltage keep on increasing with sound energy level is increased. The output from the project of "Conversion of Sound Energy into Electrical Energy" is described below as table, plot and real time reading from display.

Sound Level (dB)	Voltage (V)
86	0.60
87	0.70
88	0.90
89	0.91
90	1.00
91	1.20

Table 4.1: Output of Sound Energy

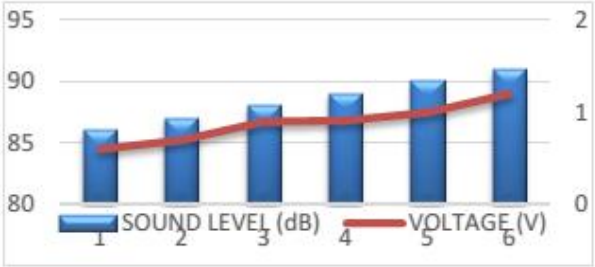

Figure 4.1: Graph of Analysis Sound and Voltage

V. Conclusion

Energy is the basic need for the development of the modern world. For meeting up the regular demand of energy we need to design a system that will produce electricity without destroying nature. Random sound energy around us can be treated as a source of electric power after their efficient conversion using suitable transducer. In this project, Peltier transducer is used for conversion of sound to electric energy. The produced electric energy from multiple Peltier transducers are stored in multiple super capacitors which are then summed up and amplified through adder and voltage multiplier circuits. Since sound is present in enormous quantity in nature therefore it can be utilized by converting into suitable Electrical energy.

VI. Future Scope

If sound energy is able to be converted into electric energy efficiently it could help us to reduce the scarcity of electrical energy across the globe. This helps in the reduction of CO2 since Electrical energy is clean energy.

The noise pollution in the road would be able to get converted into electric energy and lights the street lightning, signals and various other electrical appliances altogether.

The sound energy is the unexplored source which has enormous potential to meet the future growing requirements of the electricity and serve as the eco-friendly and renewable source of energy. This technology is not practically usable up till now due to efficiency concerns but the present work on this field makes its future quiet promising.

The noise pollution in runway could be used to produce electricity.

References

[1]. Man Prakash Gupta, Min-hee S Sayer, Saibal Mukhopadhyay, Satish Kumar, On Chip Peltier Cooling Using Current Pulse - 78-1-4244-5343-6/10/$26.00 ©2010 IEEE

[2]. Shalabh Rakesh Bhatnagar (2012) 'Converting Sound Energy to Electrical Energy' International Journal of Emerging Technology and Advanced Engineering, ISSN 2250-2459, Volume 2, Issue 10.

[3]. Sarinee Ouitrakul, Preliminary Experiment for Electricity Generation using Peltier Modules,78-1-4799-2993 1/14/$31.00©2014.IEEE WebSource:www.reuk.co.uk/wordpress/thermoelectric/what-isa-peltier-cooler

[4]. Surash Balpande, Manish Bhaiyya, Dr, Rajesh S. Pande, Low Cost Fabrication of Polymer Substrate Based Piezoelectric MicroGenerator With PPE,IDE and ME, Accepted Manuscript, IET Electronics Letter, ISSN 1350-911XPrint ISSN 0013-5194 DOI: 10.1049/el.2016.4099

[5]. Pulkit Tomar , Pavanesh kumar , Neyaz Ali , Sandeep Kumar (2016), 'Conversion of Noise pollution to Electrical Energy' International Journal of Scientific & Engineering Research, Vol.No.5, Issue No: 03.