Regional Studies, Vol. 42.10, pp. 1299–1312, December 2008

Routledge
Taylor & Francis Group

Industrial Symbiosis in Puerto Rico: Environmentally Related Agglomeration Economies

MARIAN R. CHERTOW, WESLYNNE S. ASHTON and JUAN C. ESPINOSA
Center for Industrial Ecology, Yale School of Forestry & Environmental Studies, 205 Prospect Street, New Haven, CT 06511, USA. Emails: marian.chertow@yale.edu, weslynne.ashton@yale.edu and juan.c.espinosa@aya.yale.edu

(Received August 2005: in revised form August 2007)

CHERTOW M. R., ASHTON W. S. and ESPINOSA J. C. Industrial symbiosis in Puerto Rico: environmentally related agglomeration economies, *Regional Studies*. Industrial symbiosis, a sub-field of industrial ecology, examines the flow of water, energy, materials, and by-products across firms in geographic proximity. Environmentally related co-location benefits often result that have not been a focus of traditional agglomeration economies, but extend the basic theory. This paper conceptualizes the relationship between agglomeration economies and industrial symbiosis, finding that many negative environmental externalities can be reduced while increasing production efficiency. Four industrial regions of Puerto Rico, all with agglomeration economies, but only two with significant industrial symbiosis, highlight the contribution of symbiosis and how it can influence both static and dynamic agglomeration economies.

Industrial ecology Industrial symbiosis Agglomeration economies Environment Sustainable development Puerto Rico

CHERTOW M. R., ASHTON W. S. and ESPINOSA J. C. 波多黎各的产业共生：与环境相关的聚集经济，区域研究。产业共生-产业生态学的子学科，主要考察地理区位上毗邻公司间的水流，能源流、材料流以及副产品流。与环境相关的地理区位毗邻的优势往往不是传统聚集经济学讨论的核心，（这一议题已经）超越了基本理论的范畴。本文将聚集经济和产业共生之间的相互关联进行概念抽象后发现，（产业共生）在提高生产率的同时也可以消减许多消极的环境外部性。波多黎各四个产业区中均存在聚集经济，其中只有两个（产业区）存在明显的产业共生，（这）在强调了共生的重要作用的同时也反映出其是如何影响到静态及动态聚集经济的。

产业生态 产业共生 聚集经济 环境 可持续发展 波多黎各

CHERTOW M. R., ASHTON W. S. et ESPINOSA J. C. Symbiose industrielle à Porto Rico: économie d'urbanisation liée à l'environnement, *Regional Studies*. La symbiose industrielle, sous domaine de l'écologie industrielle, examine les flux d'eau, d'énergie, de matériaux et de sous-produits entre entreprises voisines. Les avantages de la co-occupation présentent souvent des résultats qui n'ont pas été au cœur des économies d'urbanisation classiques mais qui prolongent cette théorie de base. Cet article conceptualise les relations entre les résultats de l'économie d'urbanisation et ceux de la symbiose industrielle selon lesquels de nombreux effets externes environnementaux négatifs peuvent être réduits tout en augmentant la productivité. Quatre régions industrielles de Porto Rico, toutes dans des économies d'urbanisation mais dont deux seulement avec une symbiose industrielle significative, mettent en lumière la contribution de la symbiose et comment elle peut avoir une influence sur des économies d'urbanisation statiques et dynamiques.

Écologie industrielle Symbiose industrielle Économie d'urbanisation Environnement Développement durable Porto Rico

CHERTOW M. R., ASHTON W. S. und ESPINOSA J. C. Industriesymbiose in Puerto Rico: umweltbezogene Agglomerationswirtschaften, *Regional Studies*. Im Bereich der Industriesymbiose – einem Untergebiet der Industrieökologie – werden die Ströme von Wasser, Energie, Materialien und Nebenprodukten zwischen Firmen innerhalb eines geografischen Bereichs untersucht. Ein häufiges Resultat sind umweltbezogene gemeinsame Standortvorteile, die bisher nicht im Mittelpunkt der traditionellen Agglomerationswirtschaften standen, sondern die Grundtheorie erweitern. In diesem Beitrag wird die Beziehung zwischen Agglomerationswirtschaften und Industriesymbiose konzeptualisiert, wobei festgestellt wird, dass sich zahlreiche negative Umweltexternalitäten bei gleichzeitiger Erhöhung der Produktionseffizienz reduzieren lassen. Anhand von vier Industrieregionen in Puerto Rico – alle mit Agglomerationswirtschaften, aber nur zwei mit signifikanter Industriesymbiose – wird der Beitrag der Symbiose hervorgehoben, und es wird verdeutlicht, wie sich die Symbiose auf statische und dynamische Agglomerationswirtschaften auswirken kann.

Industrieökologie Industriesymbiose Agglomerationswirtschaften Umwelt Nachhaltige Entwicklung Puerto Rico

0034-3404 print/1360-0591 online/08/101299-14 © 2008 Regional Studies Association DOI: 10.1080/00343400701874123
http://www.regional-studies-assoc.ac.uk

Downloaded By: [Yale University] At: 18:30 9 October 2009

CHERTOW M. R., ASHTON W. S. y ESPINOSA J. C. Simbiosis industrial en Puerto Rico: economías de aglomeración relacionadas con el medio ambiente, *Regional Studies*. En el ámbito de la simbiosis industrial – un subcampo de la ecología industrial – se examina el flujo del agua, la energía, los materiales y los subproductos en todas las empresas en proximidad geográfica. Los beneficios medioambientales de una ubicación común no han sido con frecuencia un enfoque de las economías de aglomeración tradicionales sino la ampliación de la teoría básica. En este artículo se visualiza la relación entre las economías de aglomeración y la simbiosis industrial, y se concluye que muchas externalidades medioambientales negativas pueden ser reducidas mientras que se aumenta la eficacia de la producción. Cuatro regiones industriales de Puerto Rico, todas con economías de aglomeración, pero sólo dos con simbiosis industriales significativas, recalcan la contribución de la simbiosis y cómo puede influenciar en las economías de aglomeración tanto estáticas como dinámicas.

Ecología industrial Simbiosis industrial Economías de aglomeración Medio ambiente Desarrollo sostenible Puerto Rico

JEL classifications: O13, Q30, R32, R58

Downloaded By: [Yale University] At: 18:30 9 October 2009

INTRODUCTION

Analysis of the sustainability of resource flows is the central theme of a new interdisciplinary field called industrial ecology. The field developed over the last fifteen years with the intent of describing and evaluating industry–environment interactions based on a systems perspective. Within industrial ecology, industrial symbiosis focuses on the flow of resources through clusters of geographically proximate businesses (CHERTOW, 2000). Ideally, industrial ecology proposes that industrial systems would operate like natural ecosystems in which:

> the consumption of energy and materials is optimized and the effluents of one process . . . serve as the raw material for another process.
>
> (FROSCH and GALLOPOULOS, 1989, p. 144)

That there are advantages of co-locating businesses is nothing new to economic geographers and regional development specialists. Spontaneous co-location has enhanced economic activity since the beginning of urban settlements, and, in particular, co-location has often characterized industrial development in the modern era (KRUGMAN, 1991a). The aggregation of localized increasing returns is regarded as a major force that drives human activities to concentrate in cities as well as industries to locate near to one another (DURANTON and PUGA, 2003; FUJITA and THISSE, 1996; ROSENTHAL and STRANGE, 2003). The positive externalities that accrue from geographic concentration are known as agglomeration economies.

This paper looks at the environmental benefits of co-location through industrial symbiosis, as well as at the theory of agglomeration economies, and links concepts across the two. Drawing on empirical research from Puerto Rico, a densely populated, industry-intensive commonwealth of the USA, the paper examines how agglomeration economies theorized in the economic geography and regional science literature actually play out in four different industrial settings on the island, only two of which also display industrial symbiosis.

The environmental benefits of co-location in industrial areas that result from sharing and cycling of resources such as energy, water, and materials, which are not included in the traditional accounting of agglomeration economies, are examined. The goal is to open discourse that can extend the argument concerning agglomeration economies to encompass the positive environmental externalities that can accrue in industrial clusters by means of industrial symbiosis. By broadening agglomeration economies to include environmental advantages explicitly, it is hoped to raise the awareness of the need for environmental sustainability within regional development contexts.

The first section of the paper describes the phenomenon of industrial symbiosis. The second section closely examines agglomeration economies and argues that industrial symbiosis expands the boundaries of this concept. The third section first examines Puerto Rico and its industrial clusters and then analyses lessons learned in key industrial areas in Puerto Rico about the relationship between industrial symbiosis and agglomeration economies. The fourth section discusses the research findings and implications.

INDUSTRIAL SYMBIOSIS

Industrial symbiosis engages traditionally separate industries in cooperative approaches for managing resource flows that improve their overall environmental performance. Taking as its starting point a vision of industry organized along the model of an ecosystem, industrial symbiosis draws on the concept of biological symbiotic relationships where unrelated organisms can find mutual benefit through the exchange of resources, typically wastes. The small city of Kalundborg in Denmark provides the best-known example of industrial symbiosis in action. Here, the primary business partners include an oil refinery, a power station, a gypsum board facility, and a pharmaceutical company that literally share ground water, surface water, wastewater, steam, and fuel, and exchange a variety of by-products that become inputs in other processes

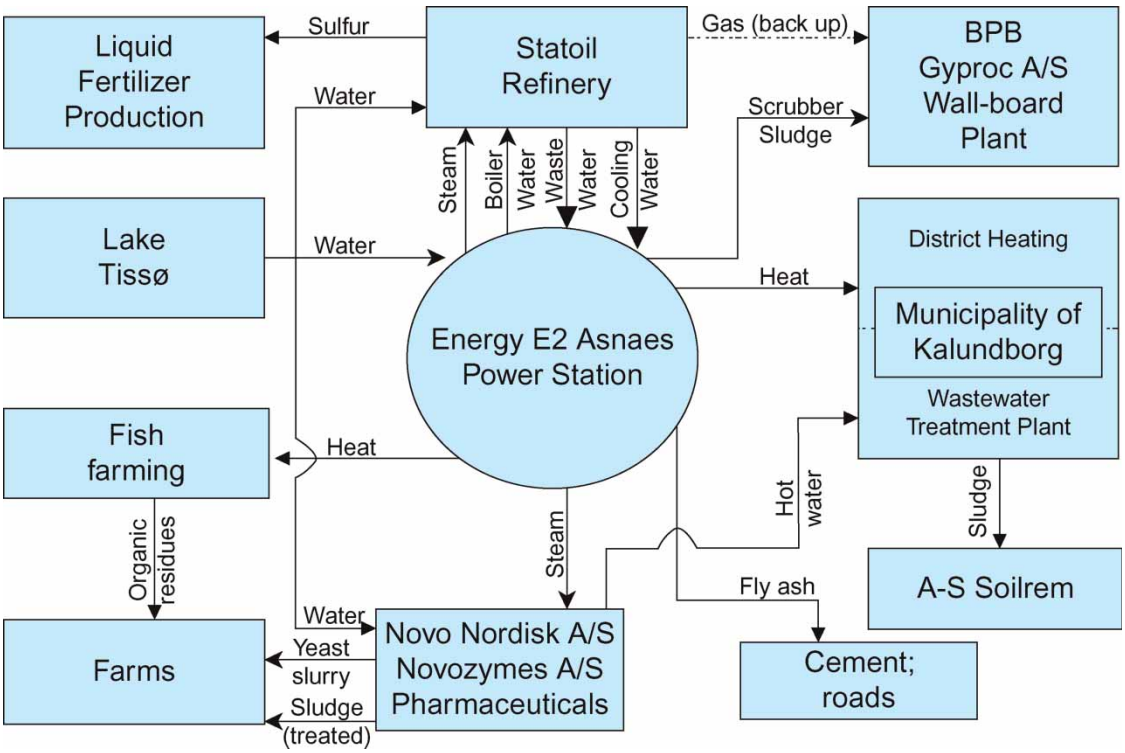

Fig. 1. *Industrial symbiosis in Kalundborg, Denmark*

(Fig. 1). Symbiosis in Kalundborg has resulted in substantial economic and environmental benefits (Ehrenfeld and Chertow, 2002; Jacobsen and Anderberg, 2005). Approximately 3 million cubic meters of water, 20 000 tons of oil, 80 000 tons of coal ash, and 200 000 tons of virgin gypsum are saved annually through the industrial symbiosis exchanges (Symbiosis Institute, 2007). Since Kalundborg's symbiosis was first publicized in the early 1990s (Barnes, 1992; Knight, 1990), scholars have been investigating similar instances around the world (Chertow *et al.*, 2004).

Inter-firm symbiotic linkages can come in several forms. Industries may physically exchange materials, water, energy, or by-products. In addition, they can exchange information to increase the collective efficiency of their operations, and coordinate planning, project management and regulatory permitting. Successful inter-firm synergies that address societal demands for resource conservation bestow both private benefits to firms and public benefits to the surrounding population.

To compare industrial symbiosis with related concepts in economic geography, three primary means of resource sharing have been distinguished based on the following observations:

- Utility/infrastructure sharing – the pooled use and management of commonly used resources such as steam, electricity, water, and wastewater. The main feature is that a group of firms jointly assumes the responsibility for providing utility services or infrastructure, such as water, energy or heat provision systems (i.e., co-generation plants), or wastewater treatment plants, a task generally undertaken by municipal authorities or specialized companies.
- Joint provision of services – involves firms collectively meeting their ancillary needs, which relate to materials and services not directly related to the core business of a company. Fire suppression, security, cleaning, catering, and waste management are examples of ancillary services that have environmental implications.
- By-product exchanges – the use of traditionally discarded materials or wastes as substitutes for commercial products or raw materials. By-product exchanges may enhance a firm's resource efficiency by taking advantage of the intrinsic economic value of 'wastes', and are key in transitioning from linear to circular material and energy flows in industrial systems, a fundamental goal of industrial ecology (Ehrenfeld and Gertler, 1997; Graedel, 1996; Lowe and Evans, 1995; Tibbs, 1992). Some by-product exchanges may involve the cascading reuse of materials or energy across many different applications where each successive application requires a lower quality of the material (Sirkin, 1991; Sirkin and Ten Houten, 1994).

Industrial symbiosis activities occurring in two types of regional industrial systems are differentiated: single-industry dominated clusters and multi-industry ones, which align along several dimensions with localization and urbanization economies, respectively. In localization

Downloaded By: [Yale University] At: 18:30 9 October 2009

economies, a majority of firms belong to a single industry and generally use similar resources and generate similar products, co-products, by-products and residuals. This situation presents a ready opportunity for them to manage those resources more effectively through collective action. In a petrochemical complex, for example, extremely high levels of material efficiency are achieved through systematic use of the product streams from crude petroleum. With regard to urbanization economies, firms belong to different industries and most often work in isolation from one another. It has been shown, however, in the example of Kalundborg described above, that the variety of material inputs and outputs creates numerous opportunities for exchanges between different pairs of firms (CHERTOW and ASHTON, 2004).

Most successful examples of industrial symbiosis reflect elements of spontaneous, self-organizing processes, as in Kalundborg, which evolve over time and are based on economic benefits of exchange across companies. Numerous attempts to compel resource exchange through planning efforts have not achieved comparable levels of economic and environmental benefits (CHERTOW, 2007). In fact, recent research has found that many industrial symbiosis exchanges rely upon personal relationships and cooperative attitudes among managers (ASHTON, 2008; JACOBSEN, 2005). These findings support the idea that industrial symbiosis relationships, like some within agglomeration economies as well, are socially embedded, that is, they depend on social ties, familiarity, and shared norms among members of the local industrial community (GORDON and MCCANN, 2000; UZZI, 1996).

Downloaded By: [Yale University] At: 18:30 9 October 2009

AGGLOMERATION ECONOMIES AND ENVIRONMENTAL PERFORMANCE

DESROCHERS (2000) has characterized the economic benefits derived from industrial symbiosis as belonging to the broad class of 'agglomeration economies'. He argues that the motivation for localized waste reuse is long-standing and economically based and precedes recent theories and concepts such as industrial ecology or environmental regulation (DESROCHERS, 2000, 2002). This section will further examine the literature on agglomeration economies relating to the co-location of firms within the same industry (localization economies) and those relating to the co-location of firms in different and unrelated industries (urbanization economies) (HOOVER, 1937), to illuminate how industrial symbiosis might fit with or expand the theory. Static and dynamic agglomeration economies, the former being primarily efficiency based and the latter involving learning processes (HARRISON *et al.*, 1996), will be explored. How the mechanisms of 'sharing, matching and learning' between firms are exhibited in systems engaging in industrial symbiosis will also be addressed. Rather than explore in depth the growing literature of agglomeration economies, focus is made on the aspects highlighted above as these are most relevant to industrial symbiosis and the study sites described in the latter half of the paper.

Sources and types of agglomeration economies

Based on his studies of the English textile districts in the late 1800s, economist Alfred Marshall (MARSHALL, 1890) explored the rationale behind industrial concentration in relation to economies external to the firm and beyond its control (MUKKALA, 2004) but still dependent on the scale of a localized industry (O'SULLIVAN, 2000; PARR, 2002). He attributed these economies to three main sources (KRUGMAN, 1991b): the presence of a large and concentrated pool of firms and skilled workers (labour pooling); the availability of industry-specific inputs at lower costs resulting from supplier economies of scale (input sharing); and the opportunities for information exchange essential to the innovation process (knowledge spillovers).

PORTER (1990, 1998) extends the notion of localization economies in his much-cited work on business clusters and competitive advantage. This formulation of clusters encompasses not only firms, but also consumers and institutions that support their growth, allowing firms to benefit as if they operated at a larger scale without sacrificing their individual flexibility (PORTER, 1998). As explained by ROBERTS (2004):

> Firms and organizations involved in clusters are able to achieve synergies and leverage economic advantage from shared access to information and knowledge networks, supplier and distribution chains, markets and marketing intelligence, special competencies, resources and support institutions available in a specific locality.
>
> (p. 999)

Urbanization economies are a product of the concentration of economic activities and may accrue from the co-location of firms in diverse industries. Jane Jacobs (JACOBS, 1969) is well known for highlighting the importance of urban diversity for the cross-fertilization of ideas and encouraging creativity and innovation. Other benefits derived from urban diversity are shared access (1) to a large and diverse labour pool (MUKKALA, 2004), (2) to a higher division of labour (GLAESER, 1998; QUIGLEY, 1998), and (3) to indivisible public goods and infrastructure such as municipal services, public utilities, and transportation and communication systems (DURANTON and PUGA, 2003; MUKKALA, 2004; PARR, 2002).

Static agglomeration economies occur when production costs of labour and infrastructure for firms in a cluster are less than for comparable firms located elsewhere (HARRISON *et al.*, 1996; HENDERSON *et al.*, 1995). Beyond these efficiencies, dynamic agglomeration economies evolve from knowledge creation and learning over longer periods of time, and may be

associated with a history of interactions and cultivated long-term relationships (HENDERSON *et al.*, 1995).

DURANTON and PUGA (2003) have identified three mechanisms through which agglomeration economies accrue: sharing, matching and learning. The sharing mechanism refers to shared gains from increased input variety and narrower specialization, reductions in turnover risks and market demand uncertainty, and access to public goods and infrastructure. The matching mechanism refers to the effect that increasing the number of agents (workers, suppliers, firms) has on the following: improving the chances of matching available inputs (skilled workers, intermediate products, or knowledge) with a firm's specific needs and improving the quality of such matches. The learning mechanism relates to the generation, diffusion, and accumulation of knowledge within and across firms.

The literature on agglomeration refers mostly to positive externalities. However, agglomeration, and urban concentrations in particular, may also bring negative externalities such as increased costs of living and commuting, health-related costs, pollution, congestion of local amenities and infrastructure, increased crime and other social problems (GLAESER, 1998; HANSON, 2001; HENDERSON, 1994; QUIGLEY, 1998). The following sections will elaborate on how the concept of industrial symbiosis enhances the concept of agglomeration economies by expanding its scope to include environmental benefits, thus lessening the impact of negative agglomeration externalities while increasing production efficiency.

Downloaded By: [Yale University] At: 18:30 9 October 2009

Industrial symbiosis and agglomeration economies

Firms may participate in different types of collaborative arrangements that can lead to the development of industrial symbiosis: Three typical examples noted above are (1) utility sharing, (2) joint service provision, and (3) by-product exchanges. Each is discussed further to explore the relation between these types of inter-firm relationships and agglomeration economies. While none is 'new' per se, each is discussed with explicit recognition of environmental benefits.

Utility sharing. The provision of public utilities and shared access to infrastructure have been considered business attractors for urban centres (O'SULLIVAN, 2000), rationales for business clustering (ENRIGHT, 2003), and Marshallian-type agglomeration externalities (FUJITA and THISSE, 1996). DURANTON and PUGA (2003) specifically include shared access to public goods and services in the sharing mechanism. Through utility sharing initiatives, companies can reduce input costs and also ensure provision of reliable water, energy and heat, all fundamental resources to most businesses and critical for the stability of their operations.

Under the industrial symbiosis framework, utility sharing includes management by involved firms and can be considered a private cost (for operating the service) as well as a private benefit encompassed by traditional agglomeration economies (shared fixed costs, economies of scale, and improved business stability). At the same time, the industrial symbiosis framework recognizes the public benefits that ensue such as fewer emissions from energy systems, increased use of cleaner or renewable energy sources, and reduced demand and impact on water systems. Examples of utility-sharing initiatives with public and private benefits include the collective use of a geothermal exchange system in the Phillips Eco-Enterprise Center in Minneapolis, Minnesota, which improved energy efficiency by 35% in its office building facility (KRAUSE and BRINKEMA, 2003), and the provision of water, steam, and compressed air by an oil refinery to more than ten neighbouring chemical companies on Pulau Aayer Merbau in the Jurong Island petrochemical complex in Singapore (PCS, 2007).

Joint service provision. Providing services collectively is also a common theme in the agglomeration economies literature. The economies of scale associated with the outsourcing of intermediate inputs and ancillary services are considered sources of both urbanization and localization economies (MCCANN, 2001; O'SULLIVAN, 2000; PARR, 2002; ROSENTHAL and STRANGE, 2003, 2004). Collective access to a wider variety of inputs and higher degrees of specialization are also components of DURANTON and PUGA's (2003) sharing mechanism. Cost reduction, higher efficiency, and increased product and service quality are thereby considered typical benefits of joint service provision.

It is also significant that these initiatives can bring about public environmental benefits as a result of reductions in both overall resource use and emissions. Material and energy intensity may be reduced through joint service provision as individual firms do not have to own ancillary infrastructure and equipment when using a common external provider, and resource productivity may increase as those providers, whose core business is precisely that of the ancillary activity, are presumed to use resources more efficiently. Environmental gains from joint service initiatives may not be substantial at a firm level, but they can add up to significant savings at the regional level. The Rotterdam harbour and industrial complex provides an example of joint service provision with positive environmental impact. An external supplier is currently providing compressed air to 14 companies in the complex, and preliminary results show savings of 20% in both costs and energy, as well as reductions in carbon dioxide (CO_2) emissions (BAAS and BOONS, 2004).

By-product exchanges. Being able to exchange material wastes rather than discarding them is influenced by geographic proximity, especially since transport costs will eventually limit the spatial boundaries over which

certain by-product exchanges remain economically viable. Still, they can be carried out within a wide range of geographic scales, from narrowly defined industrial parks, to wider industrial districts, to virtual exchanges across broader regions (CHERTOW, 2000). While many by-product exchanges, especially of high-value, low-volume goods, are not spatially constrained, those that are constrained are most relevant to the discussion here of agglomeration economies.

Companies engaging in by-product exchanges with nearby firms may attain benefits such as reduced transport (PARR, 2002) and transaction costs (ENRIGHT, 2003), lower inventory requirements and a potential for just-in-time delivery, or the possibility to suit inputs to customer requirements better through collaborative agreements (FESER, 2002). This type of exchange can bring other financial and environmental benefits. Using by-products as raw material substitutes can lower input costs and reduce overall materials and energy requirements as a result of increased cycling. Selling wastes rather than paying to dispose of them brings additional revenues to firms, decreases waste management costs, and most often reduces the environmental impact of these materials (DESROCHERS, 2002; EHRENFELD and GERTLER, 1997; LOWE *et al.*, 1995; MIRATA, 2004; SCHWARZ and STEININGER, 1997).

By-product exchanges often develop across firms from unrelated industries. DURANTON and PUGA's (2003) matching mechanism may explain one underlying principle: having more variety brings a greater likelihood of finding and facilitating input–output 'matches'. Examples of by-product exchanges include the use of steel slag for cement production (FORWARD and MANGAN, 1999), and the recovery and reuse of animal by-products as an alternative fuel source in the UK (NATIONAL INDUSTRIAL SYMBIOSIS PROGRAMME (NISP), 2006).

Types of industry concentrations and their potential for industrial symbiosis

Both agglomeration economies and industrial symbiosis activities in any specific location vary with industrial composition. Firms in single or related industries often benefit from conventional localization economies (HARRISON *et al.*, 1996). As they frequently share the same types of infrastructure and ancillary needs, they can also benefit from the joint provision of utilities and environmentally related services, more often associated with urbanization economies (Table 1). Synergy Park in Australia, for example, is a food and pharmaceutical cluster developed under the premise of shared infrastructure that includes a sewage pretreatment plant, a boiler for steam and energy, and facilities for occupational health, safety and training (ROBERTS, 2004).

With regard to by-product exchanges, a distinction must be made between localization economies that comprise all or several stages of a product's value chain versus those in only one of those stages. In the latter case, competing firms can benefit from utility or service sharing because they are more likely to have similar resource needs for their manufacturing processes and in turn generate similar types of by-products and residuals (CHERTOW and ASHTON, 2004). However, this limits the potential for by-product exchanges amongst each other, although such exchanges might exist with companies from other industries, especially when it is possible to aggregate materials across firms. In addition, direct competitors may not want to engage in linkages involving by-products or residuals of their core manufacturing processes for fear of losing proprietary information.

Co-location of firms along different stages in a production chain may involve either convergent or sequential processes. Industrial supplier parks place multiple suppliers in close proximity to one or a few large customers, and are thus examples of convergent processes. While there are agglomeration economies related to supplier–customer proximity, most of these parks do not exhibit by-product exchanges as material trades between their companies are simply traditional market transactions involving finished products or co-products and not by-products or residuals. As with clustered companies at the same production stage, these firms may pursue by-product exchanges with firms outside the industry.

Table 1. Industrial symbiosis and environmentally related agglomeration economies

		Types of industry concentrations		
		Localization economies	Urbanization economies	Static/dynamic agglomeration
Mechanisms	Sharing	Industry-specific services	Utility sharing and non-industry-specific services	Static agglomeration gains from increased efficiency through shared resource management
	Matching	By-product exchanges from core industry companies with other regional actors	By-product exchanges among companies in multiple industries	Static agglomeration gains from increased efficiency through cycling of resources
	Learning	Continuous pursuit of industry-specific collaboration to improve resource efficiency and the sustainability of operations	Continuous pursuit of broad-based partnerships to improve the resource efficiency and sustainability of operations	Dynamic agglomeration gains from increased learning and collaboration around sustainability issues

Downloaded By: [Yale University] At: 18:30 9 October 2009

Downloaded By: [Yale University] At: 18:30 9 October 2009

Industrial complexes, such as integrated petrochemical complexes, sugar cane complexes, and pulp-and-paper mill complexes, are examples of sequential processes that incorporate large-scale product and by-product exchanges as a result of productivity-driven process integration (CHERTOW and ASHTON, 2004; LAMBERT and BOONS, 2002). In particular, environmentally balanced industrial complexes (EBIC) have been proposed to take advantage of the environmental potential of industrial complexes (NEMEROW, 1995). One example with most of the characteristics of an EBIC is that of the Guitang Group sugar complex in the Guangxi Zhuang autonomous region of China. The Guitang Group has established an EBIC along two major supply chains derived from by-products of their sugar refinery: the molasses chain, which includes an alcohol and a fertilizer plant, and the fibre chain, comprising a paper plant and a cement mill (ZHU *et al.*, 2007).

Mixed industry clusters can benefit from the urbanization economies of utility sharing and the joint provision of non-industry-specific services, and their diversity can lead to a variety of by-product exchanges. In Kalundborg, Denmark – described above in the first section – all three types of symbioses occur. Utility sharing includes the shared management and use of a nearby lake for the provision of freshwater, and the provision of excess steam by the power station to create a heating loop for the residential buildings in the town. By-product exchanges include the trade of gypsum, fly ash, and other by-products resulting from power generation, oil refining and pharmaceutical production (EHRENFELD and CHERTOW, 2002). Joint service provision includes cooperation around issues such as training programmes for workers (JACOBSEN and ANDERBERG, 2005).

Another useful comparison between industrial symbiosis and agglomeration economies is to look at both static and dynamic benefits. Industrial symbiosis researchers are recognizing a comparable static-to-dynamic evolution from exchanges that begin for reasons of resource economics, but evolve to greater learning and increasing sophistication of the trades themselves (GERTLER, 1995). This evolution is described by Dutch industrial ecologists BAAS and BOONS (2004) as a progression from 'regional efficiency' to 'sustainable learning'. While individual exchanges are driven by cost advantages, knowledge spillovers also appear to result from increased collaboration and can lead to the spreading of eco-efficient practices across firms and to the attraction of new symbiotic partners to use available resources.

INDUSTRIAL SYMBIOSIS AND AGGLOMERATION ECONOMIES: LESSONS FROM PUERTO RICO

This section looks at the island of Puerto Rico, drawing on four study sites that illuminate the relationship between agglomeration economies and industrial symbiosis. These examples are derived from a multi-year investigation of industrial systems that began in 2001 called 'Puerto Rico: An Island of Sustainability', conducted by the Yale Center for Industrial Ecology in collaboration with the University of Puerto Rico and the Fundación Luis Muñoz Marín.

Several conditions converge to make Puerto Rico of great interest to industrial ecologists. The island presents an intricate mix of intensive industry and very diverse ecological systems within a bounded geographic space that is small enough to be carefully studied but large enough to require multifaceted solutions that are useful and comparable with many other situations around the world (DESCHENES and CHERTOW, 2004). Puerto Rico is a commonwealth of the USA located in the Caribbean Sea with a total land area of approximately 9000 km^2 and a population of approximately 4 million people. It is a world leader in pharmaceutical manufacturing, producing 16 of the top 20 best-selling drugs in the USA (PUERTO RICO INDUSTRIAL DEVELOPMENT COMPANY (PRIDCO), 2007), and is also strong in the manufacturing of electronics and medical devices (Table 2). The notion of business clusters has played a major role in Puerto Rico's economic development since the mid-20th century, through targeting particular industries as well as organizing industrial parks with infrastructure to facilitate their operations. The island currently has 139 parks managed by the Puerto Rican Industrial Development Company (PRIDCO) varying in size, number of industries, industry origin (local or multinational), and industry type.

As part of the 'Puerto Rico: An Island of Sustainability' study, teams of Yale University graduate students conducted field research at industrial sites in Puerto Rico between 2001 and 2007 (Fig. 2). Using a variety of engineering and social science methods including in-person interviews, detailed questionnaires, archival research and empirical observation, the teams

Table 2. Profile of leading industrial sectors in Puerto Rico

Sector	Number of employees	Number of plants	Facts
Pharmaceuticals	≥27 000	≥60	Produces 16 of the top 20 selling drugs in the USA
Electronics and software	≥18 000	≥80	Contributed 10.3% of total US computer and electronic shipments in 2002
Medical devices	≥17 000	≥80	Manufactures 50% of all pacemakers and defibrillators sold on the US mainland
Plastics	≥4000	≥70	

Source: PUERTO RICO INDUSTRIAL DEVELOPMENT COMPANY (PRIDCO) (2007).

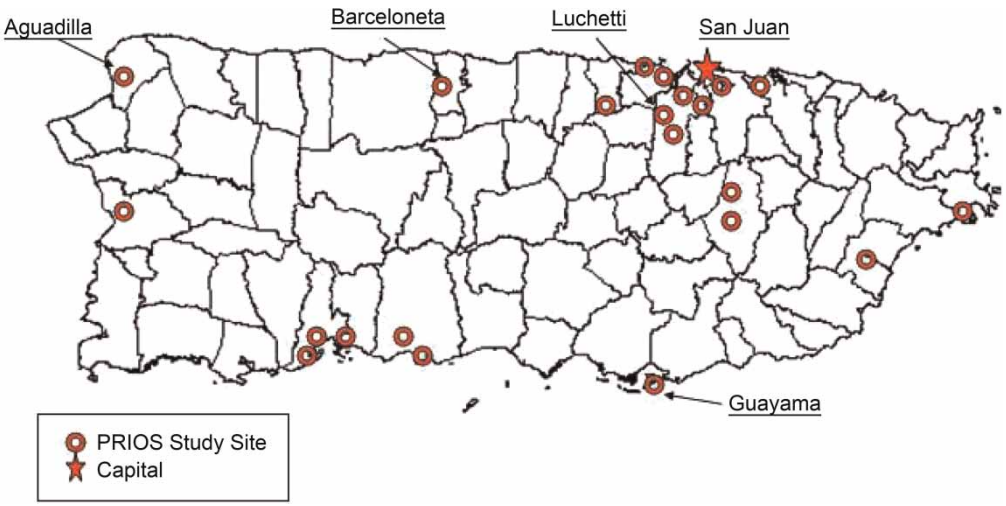

Fig. 2. 'Puerto Rico: An Island of Sustainability' study sites, 2001–07

Downloaded By: [Yale University] At: 18:30 9 October 2009

constructed material flow databases, identified existing symbiotic linkages, and evaluated the potential for increasing exchanges at locations throughout the island. The material flow analyses were used to construct industrial symbiosis scenarios focused on utility sharing, joint service provision and by-product exchanges, which were then evaluated using technical, economic and environmental criteria. Findings from the project strongly suggest that greater emphasis on industrial symbiosis linkages can strengthen agglomeration benefits by focusing attention on environmental aspects of co-location, much as the formulation of Porter's 'clusters' expanded the factors considered important for regional development.

Based on this research, four study sites are offered to compare industrial symbiosis and agglomeration economies. All four industrial parks or regions have agglomeration economies, but only two have significant industrial symbiosis, allowing one to isolate the effects of symbiosis and the ways in which it can influence agglomeration economies. These cases draw on the three aspects of the agglomeration economies literature previously discussed, as follows (also Table 3):

- The distinction between localization and urbanization economies, with a focus on comparing two instances where there is a single industry dominating a cluster of firms and two instances of multiple-industry clusters.
- Analysis of dynamic versus static agglomeration economies including the level of benefits achieved.
- Categorization of industrial symbiosis benefits as sharing, matching, or learning benefits.

The four study sites are as follows:

- Electronics-related industry cluster in Aguadilla, Puerto Rico – a single industry dominated with no symbiosis.
- Pharmaceutical cluster in and around Barceloneta, Puerto Rico – a single industry dominated with significant symbiosis.
- Luchetti industrial park in Bayamón, Puerto Rico – a mixed industry with no symbiosis.
- Rural industrial area in Guayama, Puerto Rico – a mixed industry with significant symbiosis.

Case 1: Aguadilla – a single industry dominated with no symbiosis

Aguadilla, in north-western Puerto Rico, is home to a cluster of mostly electronics suppliers in La Montaña and San Antonio industrial parks. Firms are primarily engaged in light manufacturing and assembly in four areas: computer storage devices, communication technology equipment, metals, and plastics products. The largest company is Hewlett Packard, with three facilities employing 2300 people in Aguadilla in intermediate production and testing of inkjet cartridges and assembly of computer boards. Hewlett Packard reuses or recycles 80% of its total waste – some 6.6 million lbs (3.0 million kg) in 2003 (Botero *et al.*, 2004). Many of the other firms also have in-house recycling programmes.

Being dominated by a single industry, Aguadilla is expected to exhibit localization economies. In fact, static localization economies were found to be present in Aguadilla including both skilled labour pooling and shared use of capital equipment. By using the same production line, Hewlett Packard and a neighbouring smaller company, Solectron, do parallel assembly for the co-production of computer boards. With respect to urbanization economies, through public support the nearby Aguadilla Airport was converted from military to civilian use for serving regional industry.

The investigation of this region, however, showed no industrial symbiosis to be present. To explain this observation requires an understanding of how the companies

Table 3. Agglomeration economies and industrial symbiosis at study sites

Aguadilla	
Location and number of firms	La Montaña and San Antonio industrial parks, with 16 companies
Industries	Light manufacture and assembly in: computer storage devices, communication technology equipment, metals, and plastic products
Agglomeration economies	Localization economies: labour pooling and shared use of industry-specific capital equipment
Industrial symbiosis	None; potential for the collective management of discarded wooden pallets, and for by-product exchanges involving pane glass, metal scrap, and waste ink
Barceloneta	
Location and number of firms	Barceloneta, Arecibo and Manatí cluster of 13 pharmaceutical plants and mix of other industries (chemicals, metals, food)
Industries	Pharmaceuticals
Agglomeration economies	Localization economies: specialized and skilled labour pool, specialized emergency services; urbanization economies: utility sharing
Industrial symbiosis	Collective management of a wastewater treatment plant, sludge reuse as a fertilizer, solvent recovery and reuse, and waste exchanges through a broker; potential to build co-generation facility, inter-firm cascading water reuse
Luchetti	
Location	Luchetti industrial park in Bayamón with 40 firms
Industries	Oil refining, lubricants, animal feed, metals, plastics, asphalt, food processing, auto parts, wiring, detergents, and paper recycling
Agglomeration economies	Urbanization economies: shared public utilities and park infrastructure
Industrial symbiosis	None; potential for industrial bags recycling, generation of biomass energy, and use of food processing by-products
Guayama	
Location	Barrio Jobos in Guayama with nine firms
Types of firms	Power generation, pharmaceuticals, oil refining, metals, plastics, medical devices, and detergents
Agglomeration economies	Urbanization economies: site clearing and transport facilities
Industrial symbiosis	Use of treated wastewater in cooling towers of the power plant, sale of steam from the power plant to the refinery; potential for the exchange of combustion residues and reuse of treated pharmaceutical water

Downloaded By: [Yale University] At: 18:30 9 October 2009

in this area actually operate: most are involved with electronics assembly rather than manufacturing; almost all the raw materials are imported from the USA; and a large percentage of finished goods are exported (Botero *et al.*, 2004), leaving little in terms of by-products that could be used by others.

Research indicated two key unrealized opportunities for industrial symbiosis: joint provision of waste management services and the need for a back-up energy generation enterprise among the industrial park companies to increase the reliability of energy supply.

Case 2: Barceloneta – a single industry dominated with significant symbiosis

Presently, there are 13 pharmaceutical facilities operating in and around Barceloneta, an area with historically abundant groundwater supplies. These facilities are in the manufacturing stage of pharmaceutical production, including the chemical and biological synthesis of active ingredients, and the preparation of final products. The facilities benefit from static agglomeration in the form of a large pool of skilled and semi-skilled labour as well as basic shared infrastructure such as roads.

Most of the firms participate in utility sharing, joint service provision, and by-product exchange (Fig. 3). Instances of industrial symbiosis in practice in this cluster include a shared 38 000 m^3/day capacity wastewater secondary treatment facility built primarily for the treatment of pharmaceutical wastewater (industry-specific utility sharing), and financed by the companies. The firms benefit from capacity allowance guarantees that lets them increase their production without increasing their wastewater treatment cost (B. Martir, Principal, Bemar Associates, Barceloneta, Puerto Rico, personal communication, 2005). Sludge from the plant is converted into a fertilizer that is applied to an adjacent hay farm where 68 000 kg of hay are harvested annually and sold as animal feed (by-product exchange). Waste management firms perform closed-loop solvent recovery for several pharmaceuticals, reducing the latter's virgin material use, and purchase and transportation costs. Waste brokers also facilitate occasional sales of used and off-spec materials (industry-specific joint service provision), to paint and other manufacturers (P. Sanchez, owner/Director, Waste Exchange, Trujillo Alto, Puerto Rico, personal communication, 2002). Several of the pharmaceutical facilities have investigated the feasibility of constructing a joint energy and steam co-generation facility, but this project has not been realized based on unfavourable economics (R. Riollano, Director of Site Operations, Abbott Health Products, Inc., Barceloneta, Puerto Rico, personal communication, 2003).

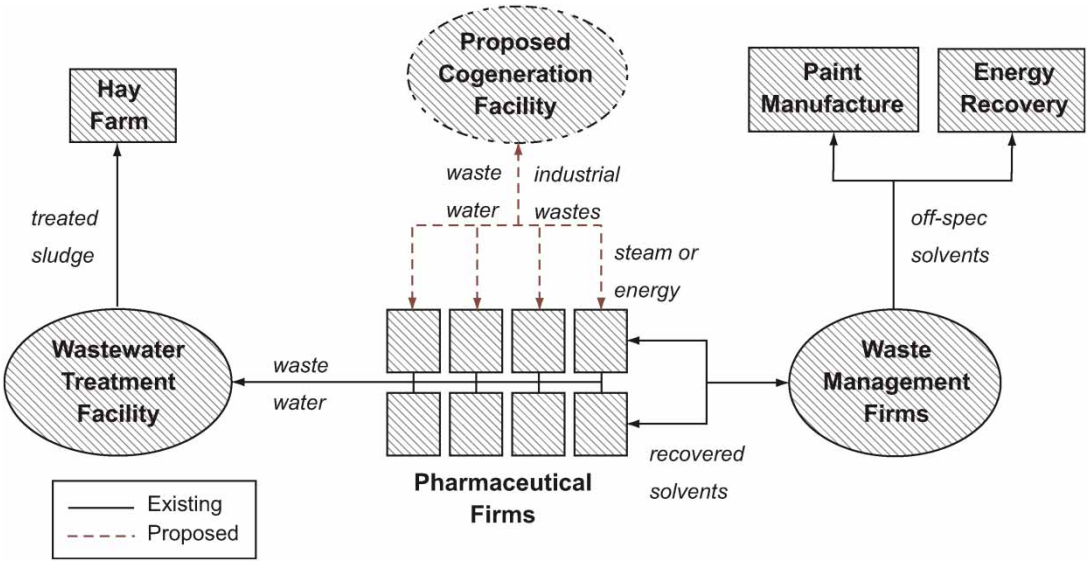

Fig. 3. Industrial symbiosis in Barceloneta, Puerto Rico

Downloaded By: [Yale University] At: 18:30 9 October 2009

These ongoing synergies were made possible through the shared positive experience of the Barceloneta Advisory Council, which is made up of the pharmaceutical facilities that financed and help manage the wastewater treatment plant initiative. Managers in the participating firms meet frequently to discuss common problems; initially these were focused on the wastewater plant, but later evolved to include other shared resource constraints (C. Bassat, Director, Community Affairs, Merck, Sharpe & Dohme – Puerto Rico, Arecibo, Puerto Rico, personal communication, 2003). The Advisory Council has served to institutionalize cooperative resource management practices among the firms and deepen the social embeddedness of inter-firm relations (Ashton, 2008). In addition, sustained inter-firm collaboration resulted in a move from a strictly sharing mechanism to collective learning about the economic and environmental benefits of shared resource management. This learning suggests that the transition between static and dynamic environmentally related agglomeration economies may have already taken place as firms continue to share information and examine opportunities for coordinating resource management.

In Barceloneta, specific, measurable benefits to the participating companies and generalized societal benefits such as preserved landfill capacity from diverting approximately 227 m^3/day of sludge, increased water treatment capacity for both industrial and residential communities, and the potential for a more reliable energy supply through co-generation are seen. In the case of water treatment, while the economies of scale of the wastewater treatment plant are conventional agglomeration benefits, industrial symbiosis includes accounting for the simultaneous environmental benefits that result.

The Barceloneta cluster also highlights an example of agglomeration dis-economies. While abundant water supply initially encouraged the spontaneous co-location of the pharmaceutical companies, in recent years the groundwater reservoir has been increasingly threatened by high extraction rates and localized areas of contamination (Renken *et al.*, 2002; Rivera-Santos, 2002), a negative externality of co-location. In-house programmes for reducing water consumption and water cascading were implemented by a few Barceloneta companies to confront this issue (Ashton *et al.*, 2002), but cascades across firms have not been explored for this purpose. This unrealized opportunity of industrial symbiosis could counteract the agglomeration dis-economies in Barceloneta.

Case 3: Luchetti – a mixed industry with no symbiosis

The Luchetti Industrial Park located in Bayamón, within the San Juan metropolitan area, houses over 40 firms involved in activities from food processing to asphalt production, to metals manufacturing to paper recycling. Having identified that localization economies usually follow co-location of firms in the same or related industries, one would expect to see urbanization economies following the development of this multi-industry park.

The investigation revealed no symbiotic linkages, and few other agglomeration benefits aside from a common plot of property and basic utilities – a very low threshold of static urbanization economies achieved passively by co-located companies. It was found that most managers of firms in the park did not even know each other, and without these social ties the results seen in Barceloneta or Guayama were not possible. Even serious common problems, such as seasonal flooding that made roads in the park impassable, were not being jointly addressed (Johnson *et al.*, 2003). Although promising industrial symbiosis opportunities were readily identified, the lack

of communication presents a significant barrier that would need to be overcome before this park can even begin to consider the collective sharing and matching benefits from these projects.

Case 4: Guayama – a mixed industry with significant symbiosis

Guayama, a town of 42 000 inhabitants in south-eastern Puerto Rico, was primarily agricultural until the 1960s. A petrochemical refinery opened in 1966 in the Jobos ward, followed by three pharmaceutical manufacturing plants in the 1980s, taking advantage of urbanization economies including site clearing and transportation access. In 2002, a 454 MW coal-fired power plant began operating using cooling water drawn primarily from the local wastewater treatment plant and selling steam to the oil refinery. The refinery circulates its condensate back to the power plant. Recently, ash from the power plant began to be used for stabilizing liquid waste before landfilling, and is also being made into a manufactured aggregate that is used in road construction (Fig. 4). The private benefits of these inter-firm transactions are high: the availability of steam, for example, has a value greater than US$8 million/year (CHERTOW and LOMBARDI, 2005).

In addition to the quantifiable economic benefits of the symbiotic activity, environmental benefits of steam sharing were also found to be substantial resulting in a 99.5% reduction of sulphur dioxide (SO_2) emissions, 84% reduction in nitrous oxide (NO_x), and a 95% reduction of particulate matter smaller than 10 μm (PM_{10}). Indeed, were it not for the ability of the coal plant to use wastewater, siting of the plant would not have been possible in this dry part of the island. Thus, in addition to agglomeration benefits, an effect of the industrial symbiosis was to facilitate regulatory permitting – thus helping the power station to achieve its licence to operate (CHERTOW and LOMBARDI, 2005).

Although symbiotic linkages have been in place for only a short time in Guayama, further opportunities for by-product exchanges are already being considered for power station ash and for wastewater with a neighbouring pharmaceutical company. By sending its pretreated wastewater directly to the power station, the pharmaceutical company would avoid water discharge fees and earn additional revenue. The power station, in turn, would benefit from having a cheaper water source. The environmental benefits of these potential exchanges include an overall reduction in virgin material use, the avoidance of wastes being discarded, and a reduction of water consumption. Further research will determine if continued learning about the economic and environmental benefits of industrial symbiosis will lead to a stage of dynamic environmentally related agglomeration economies in Guayama.

Interestingly, there is some social context behind these exchanges and the willingness to consider new opportunities. In 1982, halogenated solvents were identified in wells located between the refinery and pharmaceutical facilities. The US Environmental Protection Agency (USEPA) placed the wells on its National Priority List of hazardous waste contaminated sites designated for clean-up. The process of identifying responsible parties and devising a clean-up plan served to bring managers in this area together. While the circumstances were not pleasant, they facilitated familiarity among the key players. Subsequently, there has been movement of managers between firms, as well as joint

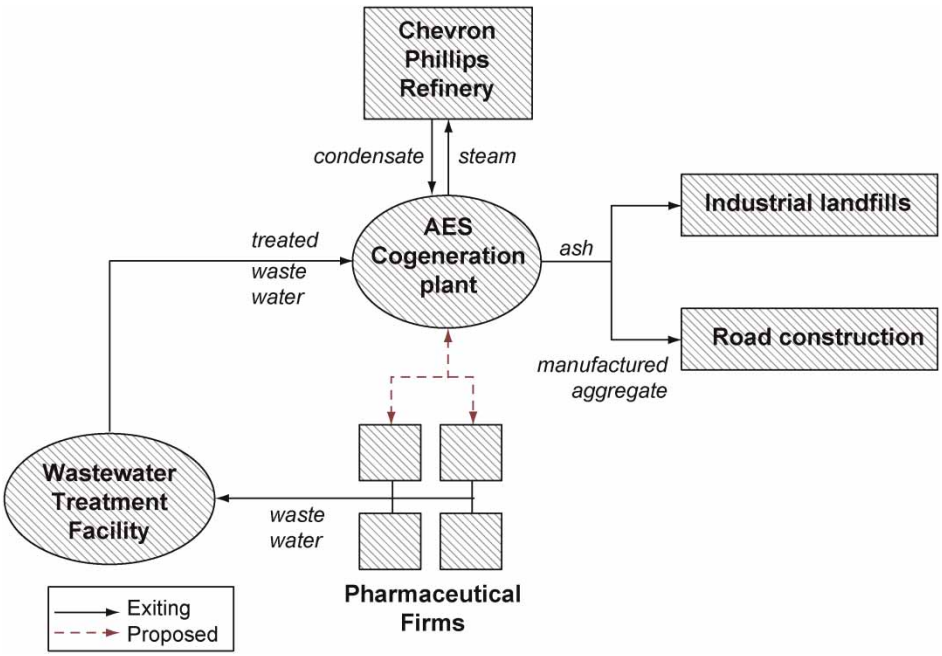

Fig. 4. Industrial symbiosis in Guayama, Puerto Rico

Downloaded By: [Yale University] At: 18:30 9 October 2009

committees that work on common concerns such as emergency planning (N. Marquez, Loss Prevention Manager, Chevron-Phillips Core Guayama, Puerto Rico, personal communication, 2005).

DISCUSSION

From a review of the Puerto Rico cases, it has been shown that both localization and urbanization economies play a vital role in the island's industrial regions. All four sites possessed urbanization economies from shared infrastructure. Aguadilla and Barceloneta, the two sites that were dominated by a single industry, also had localization benefits through labour pooling and equipment sharing.

Agglomeration economies do not automatically result from co-location, as some benefits are more passive or static (such as sharing roadways), while others are more actively pursued and result from dynamic coordination and learning (such as knowledge spillovers resulting from frequent interaction among personnel in different firms). So too are there static and dynamic industrial symbiosis opportunities because of co-location. The latter can be actively pursued once there is a realization of its potential benefits.

The Bayamón case minimally possessed passive agglomeration economies of simply sharing physical space and the amenities provided by the park owners. At the other end of the spectrum, the benefits in Guayama were derived chiefly from the ability to match needs with resources (steam and wastewater) and the willingness of firms to pursue these opportunities. In the case of Aguadilla, the absence of industrial symbiosis was partly a function of the type of the industries present – based on the assembly of non-local raw materials and low by-product volumes. The pharmaceutical cluster in Barceloneta showed the greatest range of agglomeration economies – both static and dynamic, all of matching, sharing and learning, and derived from both urbanization and localization economies. The cluster reveals many conventional gains from agglomeration economies, but the companies and the surrounding area also benefit from industrial symbiosis as a way to manage wastewater and reduce costs through by-product reuse. Gains to the community included more available capacity in public wastewater treatment and increased landfill capacity when solvents and sludges are reused rather than disposed.

Industrial symbiosis, like other types of inter-firm collaboration, faces technical, economic, regulatory, motivational and organizational barriers (Gibbs, 2003). The study sites demonstrate the importance of these factors. In Barceloneta, the social context is cemented through the wastewater Advisory Council, which increases both familiarity with common problems and trust to find cooperative solutions. Despite a willingness to cooperate, some projects, such as co-generation, have not been realized. In Guayama, though the relationships have only existed for a few years, one company appears highly motivated to pursue self-organized symbiosis with both immediate neighbours and other firms further away. In Aguadilla, there is familiarity and frequent communication among firms in this convergent supply chain, but the low volumes of by-products present a glaring technical barrier. Finally, in Bayamón, familiarity is scarce among neighbours, so there have been few opportunities for information sharing and thus inter-firm collaboration of any kind.

Industrial symbiosis presents collective solutions to common problems through cooperative management of resources and by-product exchanges for firms in geographic proximity. These cooperative solutions can lead to productivity improvements and cost reductions, which contribute to the agglomeration economies within a region. In many ways, industrial symbiosis expands the boundaries of agglomeration economies by increasing the environmental benefits of co-location. It also serves to counteract some diseconomies due to the concentration of contaminants and resource demands. Industrial symbiosis can also broaden supply chains to include non-traditional partners involved in by-product exchanges as shown in the Puerto Rican examples, adding another layer of flexibility to firms by securing resources locally and collaborating outside of their traditional organizational networks.

From policy and planning perspectives, industrial symbiosis is a useful contribution to agglomeration insofar as it can highlight opportunities for combining environmental with economic benefits in regional economic development strategies. Originally dominated by the search for factor productivity in manufacturing in the late 19th century, the theory of agglomeration economies has evolved throughout the years and extended its scope to incorporate the benefits of new business practices related to geographic proximity. For example, the localized gains of operations and inventory management derived from just-in-time initiatives, not heard of until the late 20th century, can now be found in the agglomeration literature.

Environmental studies began to grow significantly in the 1970s and the current field of industrial ecology is less than two decades old. What industrial symbiosis brings into view are two foci: the first is the emphasis on public environmental benefits, including reduced requirements for fossil energy, fresh water, and new land for waste disposal, which extends the range of benefits currently considered in agglomeration economies. The second is the opportunity not only to count positive externalities as in most of the literature on agglomeration economies, but also to identify and counteract negative environmental

Downloaded By: [Yale University] At: 18:30 9 October 2009

ones by means of industrial symbiosis for innovative solutions.

It was the objective in this paper to open a dialogue between researchers who study agglomeration economies and those who study industrial symbiosis. Further conceptualization of (1) how particular regional industrial configurations are suited to different types of industrial symbiosis and (2) how static and dynamic benefits apply to symbiosis could deepen the theoretical linkages with agglomeration economies. Additional empirical studies could be used (1) to develop a methodology to assess the benefits of symbiosis in agglomeration economies and (2) to quantify the negative environmental externalities and potential for symbiosis in industrial clusters. Understanding the environmental implications of industrial agglomeration and applying insights from industrial ecology can enhance regional economies for long-term sustainability.

REFERENCES

ASHTON W. S. (2008) Social network analysis and industrial symbiosis: application of a social science tool to understanding industrial ecosystem organization, *Journal of Industrial Ecology* **12(1)**.

ASHTON W. S., FIRMAN J. and HALL K. (2002) Industrial symbiosis in the Barceloneta pharmaceutical cluster. Research Paper for the Spring 2002 Industrial Ecology Course. Yale School of Forestry & Environmental Studies, New Haven, CT.

BAAS L. W. and BOONS F. A. (2004) An industrial ecology project in practice: exploring the boundaries of decision-making levels in regional industrial systems, *Journal of Cleaner Production* **12**, 1073–1085.

BARNES H. (1992) Fertile project exploits recycled wastes, *Financial Times* **8 October**.

BOTERO L., FUJITA C. and HENRY T. (2004) The potential for industrial symbiosis in La Montaña and San Antonio industrial parks of Aguadilla, Puerto Rico. Research paper for the Industrial Ecology Spring 2004 Course. Yale School of Forestry & Environmental Studies, New Haven, CT.

CHERTOW M. R. (2000) Industrial symbiosis: literature and taxonomy, *Annual Review of Energy and Environment* **25**, 313–337.

CHERTOW M. R. (2007) 'Uncovering' industrial symbiosis, *Journal of Industrial Ecology* **11**, 11–30.

CHERTOW M. R. and ASHTON W. S. (2004) Differentiating industrial complexes and industrial symbiosis. Paper presented at the Association of American Geographers Centennial Conference, Philadelphia, PA, USA.

CHERTOW M. R., ASHTON W. S. and KUPPALLI R. (2004) *The Industrial Symbiosis Research Symposium at Yale: Advancing the Study of Industry and Environment*, p. 46. Yale School of Forestry & Environmental Studies, New Haven, CT.

CHERTOW M. R. and LOMBARDI D. R. (2005) Quantifying economic and environmental benefits of co-located firms, *Environmental Science and Technology* **39**, 6535–6541.

DESCHENES P. J. and CHERTOW M. R. (2004) An island approach to industrial ecology: toward sustainability in the island context, *Journal of Environmental Planning and Management* **47**, 201–217.

DESROCHERS P. (2000) Market processes and the closing of 'industrial loops': a historical reappraisal, *Journal of Industrial Ecology* **4**, 29–43.

DESROCHERS P. (2002) Industrial ecology and the rediscovery of inter-firm recycling linkages: historical perspectives and policy implications, *Industrial and Corporate Change* **11**, 1031–1057.

DURANTON G. and PUGA D. (2003) *Micro-Foundations if Urban Agglomeration Economies*. Working Paper No. 9931. National Bureau of Economic Research (NBER), Cambridge, MA (available at: http://www.nber.org/papers/w9931).

EHRENFELD J. and CHERTOW M. R. (2002) Industrial symbiosis: the legacy of Kalundborg, in AYRES R. U. and AYRES L. W. (Eds) *A Handbook of Industrial Ecology*. Edward Elgar, Cheltenham.

EHRENFELD J. and GERTLER N. (1997) Industrial ecology in practice: the evolution of interdependence at Kalundborg, *Journal of Industrial Ecology* **1**, 67–79.

ENRIGHT M. J. (2003) Regional clusters: what we know and what we should know, in BROCKER J., DOHSE D. and SOLTWEDEL R. (Eds) *Innovation Clusters and Interregional Competition*, pp. 99–129. Springer, Berlin.

FESER E. J. (2002) Tracing the sources of local external economies, *Urban Studies* **39**, 2485–2506.

FORWARD G. and MANGAN A. (1999) By-product synergy, *The Bridge of the National Academy of Engineering* **29**, 12–15.

FROSCH R. A. and GALLOPOULOS N. E. (1989) Strategies for manufacturing, *Scientific American* **266**, 144–152.

FUJITA M. and THISSE J. (1996) Economies of agglomeration, *Journal of the Japanese and International Economies* **10**, 339–378.

GERTLER N. (1995) Industrial ecosystems: developing sustainable industrial systems, Master's thesis, Technology & Policy Program/Department of Civil & Environmental Engineering, Massachusetts Institute of Technology, Cambridge, MA.

GIBBS D. (2003) Trust and networking in inter-firm relations: the case of eco-industrial development, *Local Economy* **18**, 222–236.

GLAESER E. L. (1998) Are cities dying?, *Journal of Economic Perspectives* **12**, 139–160.

GORDON I. R. and MCCANN P. (2000) Industrial clusters: complexes, agglomeration and/or social networks, *Urban Studies* **37**, 513–532.

GRAEDEL T. E. (1996) On the concept of industrial ecology, *Annual Review of Energy and Environment* **21**, 69–98.

HANSON G. H. (2001) Scale economies and the geographic concentration of industry, *Journal of Economic Geography* **1**, 255–276.

HARRISON B., KELLEY M. R. and GANT J. (1996) Innovative firm behavior and local milieu: exploring the intersection of agglomeration, firm effects, and technological change, *Economic Geography* **72**, 233–258.

HENDERSON J. V. (1994) Where does an industry locate?, *Journal of Urban Economics* **35**, 83–104.

HENDERSON J. V., KUNCORO A. and TURNER M. (1995) Industrial development in cities, *Journal of Political Economy* **103**, 1067–1090.

HOOVER E. M. (1937) *Localization Theory and the Shoe and Leather Industries*. Harvard University Press, Cambridge, MA.

Downloaded By: [Yale University] At: 18:30 9 October 2009

JACOBS J. (1969) *The Economy of Cities*. Random House, New York, NY.

JACOBSEN N. (2005) Industrial symbiosis in the making: bridging social and technical explanations – the case of Kalundborg, Denmark. Paper presented at the 11th Annual International Sustainable Development Research Conference, Helsinki, Finland.

JACOBSEN N. and ANDERBERG S. (2005) Understanding the evolution of industrial symbiotic networks: the case of Kalundborg, in VAN DEN BERGH J. C. J. M. and JANSSEN M. (Eds) *Economics of Industrial Ecology: Materials, Structural Change, and Spatial Scales*, pp. 313–335. MIT Press, Cambridge, MA.

JOHNSON J., QUINN S., SHELTON E. and ZHANG Z. (2003) Luchetti Industrial Park: retrofitting an industrial park for symbiosis. Research paper for the Industrial Ecology Spring 2003 Course. Yale School of Forestry & Environmental Studies, New Haven, CT.

KNIGHT P. (1990) A rebirth of the pioneering spirit, *Financial Times*, **14 November**.

KRAUSE M. and BRINKEMA C. (2003) The Green Institute Phillips Eco-Enterprise Center in Minneapolis, Minnesota, in COHEN-ROSENTHAL E. and MUSNIKOV J. (Eds) *Eco-Industrial Strategies*, pp. 276–287. Greenleaf, Sheffield.

KRUGMAN P. (1991a) *Geography and Trade*. MIT Press, Cambridge, MA.

KRUGMAN P. (1991b) Increasing returns and economic geography, *Journal of Political Economy* **99**, 483–499.

LAMBERT A. J. D. and BOONS F. A. A. (2002) Eco-industrial parks: stimulating sustainable development in mixed industrial parks, *Technovation* **22**, 471–484.

LOWE E. A. and EVANS L. K. (1995) Industrial ecology and industrial ecosystems, *Journal of Cleaner Production* **3**, 47–53.

LOWE E. A., MORAN S. R. and HOLMES D. B. (1995) *A Fieldbook for the Development of Eco-Industrial Parks*. Report for the US Environmental Protection Agency. Indigo Development International, Oakland, CA.

MARSHALL A. (1890) *Principles of Economics*. Macmillan, London.

MCCANN P. (2001) *Urban and Regional Economics*. Oxford University Press, Oxford.

MIRATA M. (2004) Experiences from early stages of a national industrial symbiosis programme in the UK: determinants and coordination challenges, *Journal of Cleaner Production* **12**, 967–983.

MUKKALA K. (2004) Agglomeration economies in the Finnish manufacturing sector, *Applied Economics* **36**, 2419–2427.

NEMEROW N. (1995) *Zero Pollution for Industry: Waste Minimization Through Industrial Complexes*. Wiley, New York, NY.

NATIONAL INDUSTRIAL SYMBIOSIS PROGRAMME (NISP) (2006) *100,000 Tonnes Animal By-products to Fuel Cement Kilns*. Case Studies. UK National Industrial Symbiosis Programme. NISP, Birmingham (available at: http://www.nisp.org.uk/article_main.aspx?feedid=casestudy&itemid=55).

O'SULLIVAN A. (2000) *Urban Economics*, 4th Edn. Irwin/McGraw Hill, Boston, MA.

PARR J. B. (2002) Missing elements in the analysis of agglomeration economies, *International Regional Science Review* **25**, 151–168.

PCS (2007) *The Singapore Petrochemical Complex*. Petrochemical Corporation of Singapore Ltd, Singapore (available at: http://www.pcs.com.sg/).

PORTER M. E. (1990) *The Competitive Advantage of Nations*. Free Press, New York, NY.

PORTER M. E. (1998) Clusters and the new economics of competition, *Harvard Business Review* **November–December**, 77–90.

PUERTO RICO INDUSTRIAL DEVELOPMENT COMPANY (PRIDCO) (2007) Homepage (available at: http://www.pridco.com).

QUIGLEY J. M. (1998) Urban diversity and economic growth, *Journal of Economic Perspectives* **12**, 127–138.

RENKEN R. A., WARD W. C., GILL I. P., GÓMEZ-GÓMEZ F. and RODRIGUEZ-MARTINEZ J. (2002) Geology and Hydrogeology of the Caribbean Islands Aquifer System of the Commonwealth of Puerto Rico and the U. S. Virgin Islands, p. 148. United States Geological Survey, Reston, VA.

RIVERA-SANTOS J. (2002) Director, Puerto Rico Water Resources & Environmental Research Institute, University of Puerto Rico, Mayaguez, Puerto Rico.

ROBERTS B. H. (2004) The application of industrial ecology principles and planning guidelines for the development of eco-industrial parks: an Australian case study, *Journal of Cleaner Production* **12**, 997–1010.

ROSENTHAL S. S. and STRANGE W. C. (2003) *Evidence on the Nature and Sources of Agglomeration Economies* (available at: http://www.econ.brown.edu/faculty/henderson/WillAndStuart.pdf).

ROSENTHAL S. S. and STRANGE W. C. (2004) *The Micro-Empirics of Urbanization Economies* (available at: http://www.rotman.utoronto.ca/~wstrange/Strange_Micro-Empirics%20of%20Agglomeration%20Economies-4-13-2004.pdf).

SCHWARZ E. J. and STEININGER K. W. (1997) Implementing nature's lesson: the industrial recycling network enhancing regional development, *Journal of Cleaner Production* **5**, 47–56.

SIRKIN T. (1991) *The Theory of Cascading: A Design and Planning Tool for Appropriate Resource Usage*. Aarhus University Press, Aarhus.

SIRKIN T. and TEN HOUTEN M. (1994) The cascade chain: a theory and tool for achieving resource sustainability with applications for product design, *Resources, Conservation and Recycling* **10**, 213–277.

SYMBIOSIS INSTITUTE (2007) *Industrial Symbiosis – Exchange of Resources – Kalundborg, Denmark*. Kalundborg Industrial Symbiosis Institute, Kalundborg (available at: http://www.symbiosis.dk).

TIBBS H. C. (1992) Industrial ecology: an environmental agenda for industry, *Whole Earth Review* **Winter**, 4–19.

UZZI B. (1996) The sources and consequences of embeddedness for the economic performance of organizations: the network effect, *American Sociological Review* **61**, 674–698.

ZHU Q., LOWE E., WEI Y. and BARNES D. (2007) Industrial symbiosis in China: a case study of the Guitang Group, *Journal of Industrial Ecology* **11**, 31–42.

Downloaded By: [Yale University] At: 18:30 9 October 2009